BREMAS

BETTER SWITCHES

# PRODUCTS AND SOLUTIONS
## FOR PHOTOVOLTAIC APPLICATIONS

5 PATENTS

+

3 PATENTS

Pending

MADE IN ITALY

bremas.it/en

BREMAS

BETTER SWITCHES

# GENERAL CATALOGUE

BREMAS
BETTER SWITCHES

BREMAS

BETTER SWITCHES

# OVER SIXTY YEARS OF INNOVATION AND MADE IN ITALY QUALITY

Bremas' story began in 1964 with the establishment of its first production facility in the Milan metropolitan area. Since then, its industrial journey has been marked by a constant pursuit of excellence through innovative solutions. This has enabled the company to become a leader in the design, production, and marketing of cam switches, disconnect switches, position and safety switches, relay sockets, and switches for power tools.

The ability to respond promptly to market demands, combined with continuous research in technological innovation and comprehensive customer support services, has strengthened the company's position as an expression of Made in Italy quality. The excellence of Bremas products is the result of a controlled and guaranteed supply chain, where direct oversight of metal stamping and in-house validation of component molding ensure consistent precision. Every solution undergoes rigorous testing in certified internal and external laboratories, guaranteeing the structural reliability that defines the Italian industrial standard worldwide.

Since 2012, following its first patent filing for DC disconnect switches, Bremas has also become a benchmark for the solar industry, making available the expertise built over more than six decades to support the growth of this strategic sector within the energy transition.

BREMAS
BETTER SWITCHES

# INDEX


## SMART SOLAR SENTINEL 01 9
Smart Safety and Automatic Restart for PV Systems

## STRING BOXES 02 21
DC, AC/DC and AC boxes up to 22 KW

## DC DISCONNECT SWITCHES 03 41
DC switches up to 1500 Vdc 30A and 1000 Vdc 60A PV1

## SURGE PROTECTIVE DEVICES 04 81
DC and AC SPDs

## FUSE HOLDERS 05 101
DC fuse holders 1000 Vdc

## RCBOs 06 109
Residual Current Breaker with Overcurrent

BREMAS

BETTER SWITCHES

# SMART SOLAR SENTINEL

## Smart Safety and Automatic Restart for PV Systems

01

The **SMART SOLAR SENTINEL** has been especially developed as a safety device for direct current (DC) photovoltaic installations. The DC switch is used to disconnect the connected strings of the installation in case of an emergency situation (for example in case of fire or overheating).

In case of AC line interruption of the building, the **SMART SOLAR SENTINEL** automatically shutdowns the DC lines of the PV system thanks to the electronic board.

The DC disconnect switch(es) is(are) automatically turned OFF if the AC power line is interrupted for a time longer than approx. 3 seconds. Once the AC line is restored (stable for at least approx. 3 seconds), the DC disconnect switch(es) is(are) automatically turned ON.

## SMART SOLAR SENTINEL

### RESTART

Automatic reconnection saves time and costs

### SAFETY

Reliable protection for your photovoltaic system

### FIRE

Emergency disconnection during fire or overheating

Industrial & Commercial / Utility

# Disconection modes

### AUTOMATIC DISCONNECTION AND RECONNECTION

**Automatic OFF:** The DC lines disconnect automatically if the AC line is interrupted for more than 3 seconds.

**Automatic ON:** The DC lines reconnect automatically once the AC line is restored and stable for at least 5 seconds.

### MAINTAINED AUTOMATIC DISCONNECTION

**Automatic OFF:** DC lines disconnect and remain inactive after a manual remote command.

**Automatic ON:** DC lines reconnect when the manual command is released, after verifying AC line status.

### AUTOMATIC DISCONNECTION FOR OVERTEMPERATURE

**Automatic OFF:** DC lines disconnect if the cabinet temperature exceeds 100°C.

## Additional functions

### STATUS SIGNALING

The electronic board uses relay contacts to indicate the disconnect switch's status, enabling remote visual indicators (e.g., near the manual safety switch).

### MODULAR OPERATION

It is possible to connect multiple SMART SOLAR SENTINEL units to the same inverter power supply line, enabling centralized management of voltage absence and emergency shutdown through a single control point.

# FB Series - Up to 6 inputs

**PLUG & PLAY** Ready to use

| PV inputs | PV1 cat. per input | PV1 cat. per input | Code | PV inputs | PV1 cat. per input | PV1 cat. per input | Code |
|---|---|---|---|---|---|---|---|
| 1 | 1000V - 50A | 1500V - 20A | FB150301MUA2MC | 4 | 1000V - 50A | 1500V - 20A | FB150304NUA2MC |
| 2 | | | FB150302MUA2MC | 5 | | | FB150305NUA2MC |
| 3 | | | FB150303MUA2MC | 6 | | | FB150306NUA2MC |

We are available for additional custom configurations. Feel free to reach out to discuss your specific needs.

# Accessori - Dispositivo di controllo

| Code | Description |
|---|---|
| SB0203B110AL6 | Enclosed AC switch for emergency stop |
| FBXM001 | MC4 inline connector kit for string |
| FBXT001 | 32A 230 VAC T-junction connector |

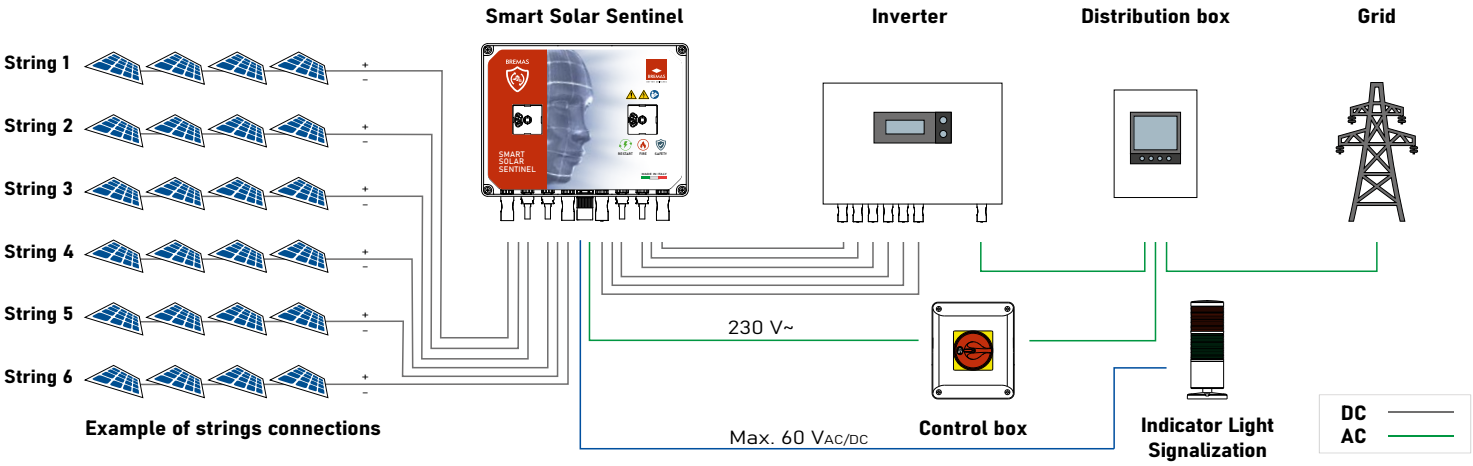

# New Fire Prevention Guidelines for Photovoltaic Systems.
# NO PROBLEM!

Designed in accordance with the DCPREV guidelines of September 1st 2025, featuring motorized disconnection for up to 6 strings rated from 50A to 1000V each, with automatic activation also in the event of fire.

## SMART SOLAR SENTINEL POSITIONING

The **SMART SOLAR SENTINEL** must be positioned as close as possible to the solar panels. Its protective enclosure shields the switch from external elements such as dust and moisture. With an IP56 protection rating, the system is designed for safe outdoor installation. It is recommended to install the **SMART SOLAR SENTINEL** away from direct UV exposure (for example, by using a metal cover).

**SMART SOLAR SENTINEL is suitable for both indoor and outdoor installations**

## Technical data of SMART SOLAR SENTINEL IEC EN 60947-3

| | | | | |
|---|---|---|---|---|
| **Rated insulation voltage** | Ui | V | 1500 | |
| **Rated impluse withstand voltage** | Uimp | kV | 8 | |
| **Rated thermal current** | Ith | A | 50 | |
| **DC Inputs** | | | | |
| **Number of inputs** | From ... up to | | 1 ... 6 | |
| **Utilization category** | | | PV1 | PV2 |
| **Rated operational current at 1500 V** | Ie | A | 20 | 8 |
| **Rated operational current at 1300 V** | Ie | A | 25 | 10 |
| **Rated operational current at 1250 V** | Ie | A | 30 | 12 |
| **Rated operational current at 1000 V** | Ie | A | 50 | 20 |
| **Rated operational current at 800 V** | Ie | A | - | 30 |
| **Rated operational current at 700 V** | Ie | A | - | 40 |
| **Over temperature shutdown** | | | | |
| **Temperature for automatic shutdown** | | °C | +100 | |
| **Short circuit protection** | | | | |
| **Rated conditional short-circuit current** | | kA | 5 | |
| **Max fuse size for short circuit protection** | gPV | A | 50 | |
| **Rated short-time withstand current (1s)** | Icw | A | 780 | |
| **Rated short-circuit making capacity** | Icm | kA | 1,4 | |
| **Mechanical and electrical features** | | | | |
| **Mechanical endurance** | cycles | Nr | 9.700 | |
| **Electrical endurance** | cycles | Nr | 300 | |
| **Panel connectors mounted on the Smart Solar Sentinel** | | | | |
| **MC4 plug-in connectors STAUBLI EVO2** | | Female | 32.0346P0001 | |
| **MC4 plug-in connectors STAUBLI EVO2** | | Male | 32.0347P0001 | |
| **Coupler connectors reccomended (not included in the Smart Solar Sentinel)** | | | | |
| **MC4 plug-in connectors STAUBLI EVO2** | | Female | 32.0318P0001 | |
| **MC4 plug-in connectors STAUBLI EVO2** | | Male | 32.0319P0001 | |
| **Protection degree IEC EN 61439-2** | | | | |
| **Smart Solar Sentinel** | | | IP56 | |
| **Ambient conditions** | | | | |
| **Pollution degree** | | | 2 | |
| **Operational ambient temperature** | | °C | -30 ÷ +50 | |
| **Storage ambient temperature** | | °C | -30 ÷ +85 | |
| **Damp heat test IEC 60068-2-30** | | °C | 90-100% at +55°C | |

**Warning!**
All **EVO2 connectors** must be correctly installed and securely sealed with an **isolator** to ensure compliance with the **IP56** rating.

Terminals recommended for the installation 32.0318P0001 (female) and 32.0319P0001 (male) are not included in the **SMART SOLAR SENTINEL**

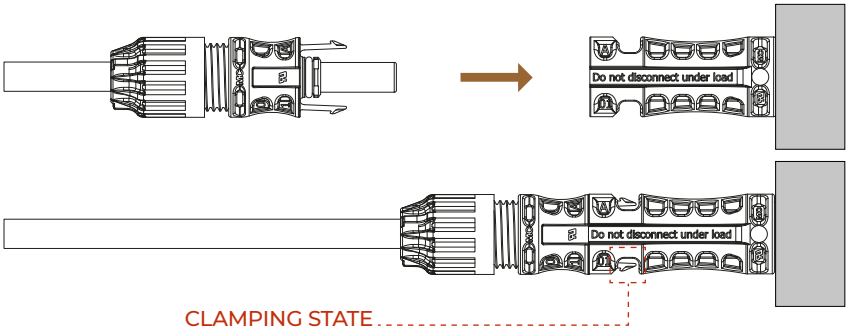

## Technical specification of AUXILIARY CONNECTORS

| L-N-GND Connector (AC Main Power) | | | |
|---|---|---|---|
| **Rated operational voltage** | Ui | VAC | 500 |
| **Working frequency** | | Hz | 50 ÷ 60 |
| **Rated impluse withstand voltage** | Uimp | kV | 4 |
| **Rated operational current** | Ie | A | 17,5 |
| **Nominal operating voltage** | Un | VAC | 100 ÷ 240 |
| **Nominal power dissipation** | Max | W | 10 |
| **Nominal current** | In | mA | 40 (at 230V) |
| **Degree of protection** | | | IP68 |
| **Connection type** | | | M3 screws |
| **Tightening torque** | Max | Nm | 0,8 |
| **Cross-section of flexible/solid wires** | Min-Max | mmq | 0,5 ... 4 |
| **Cable Diameter** | Min-Max | mm | 7 ... 12 |
| **Operational ambient temperature** | Tamb | °C | -40 ÷ +125 |
| **FB Connector (Feedback FB1 e FB2)** | | | |
| **Rated operational voltage** | Ui | VAC/DC | 500 |
| **Working frequency** | | Hz | 50 ÷ 60 |
| **Rated impluse withstand voltage** | Uimp | kV | 4 |
| **Rated operational current** | Ie | A | 17,5 |
| **Nominal operating voltage of contact** | Un max | VAC/DC | 60 |
| **Nominal external power of contact** | Max | W | 60 |
| **Nominal current of contact** | In max | A | 1 |
| **Degree of protection** | | | IP68 |
| **Connection type** | | | M3 screws |
| **Tightening torque** | Max | Nm | 0,8 |
| **Cross-section of flexible/solid wires** | Min-Max | mmq | 0,5 ... 4 |
| **Cable Diameter** | Min-Max | mm | 7 ... 12 |
| **Operational ambient temperature** | Tamb | °C | -40 ÷ +125 |

### AC Main Power

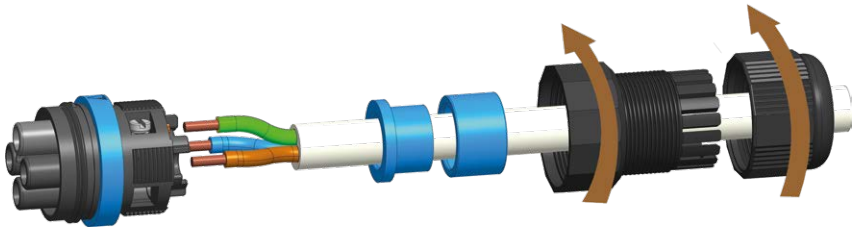

### Feedback FB1 (FB2)

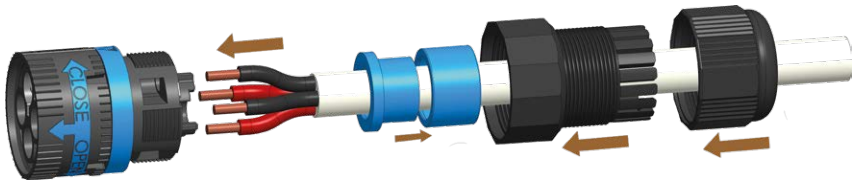

## Electrical circuit

Example of wiring connection

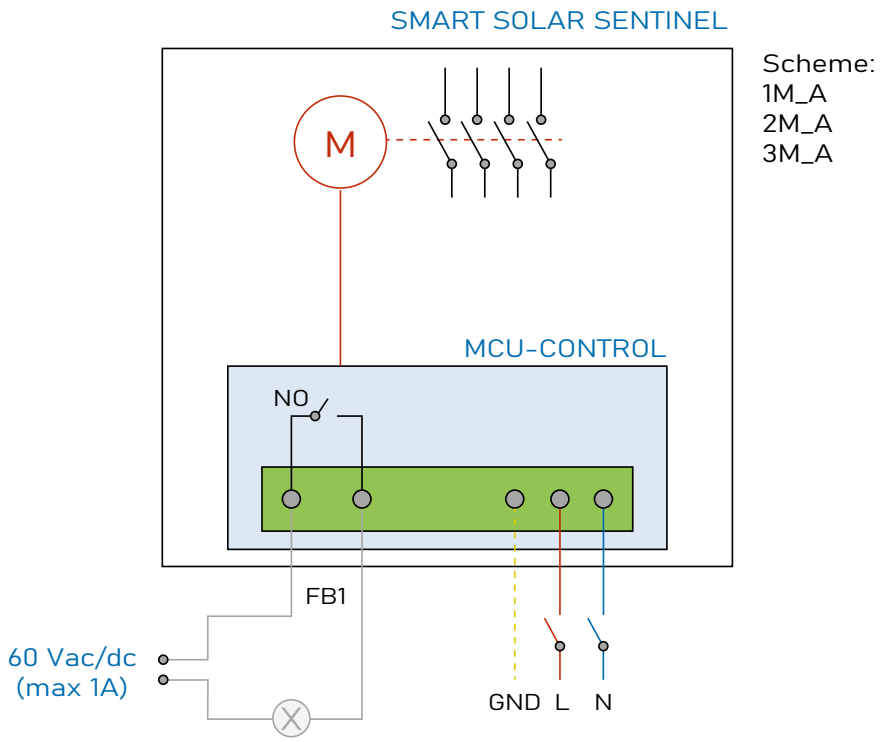


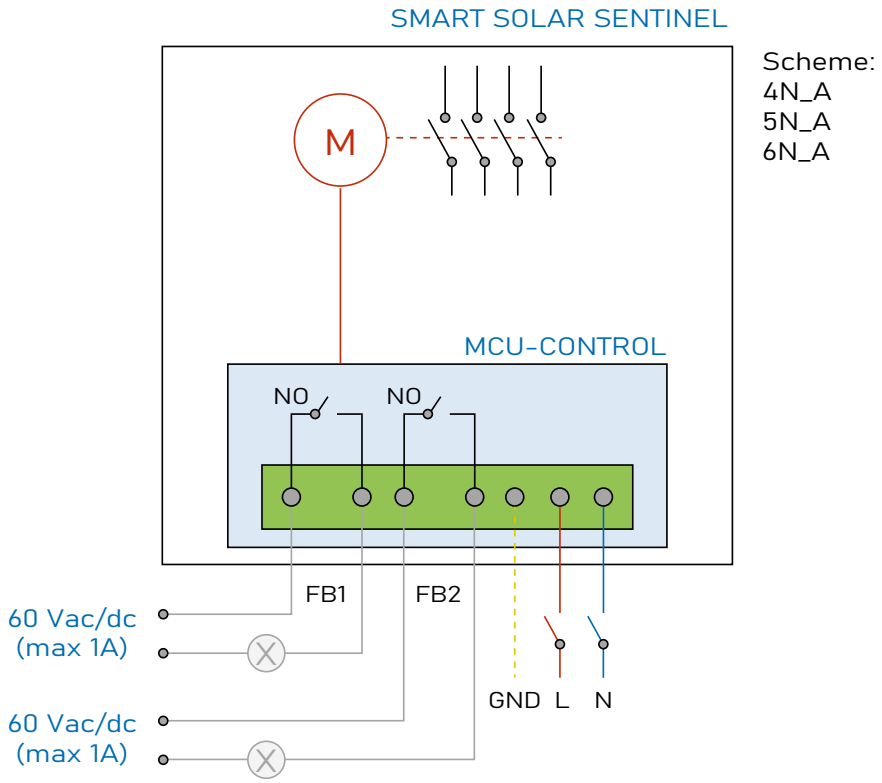

## Features

### Dimensions
FB series - 1 Input

Dimension in mm
in [inch]

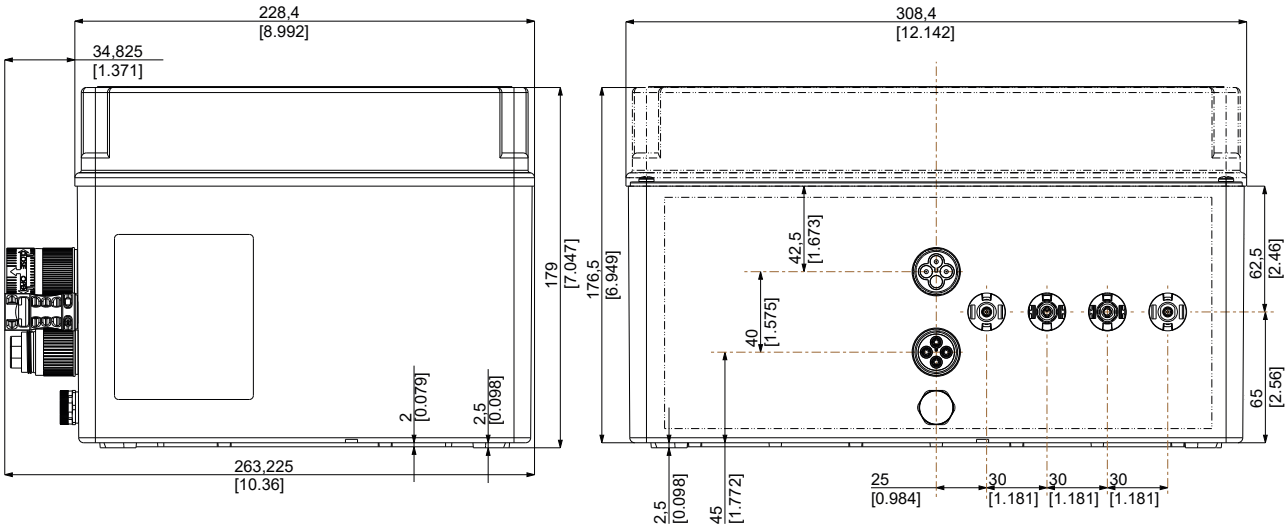


### Dimensions
FB series - 2 Inputs

Dimension in mm
in [inch]

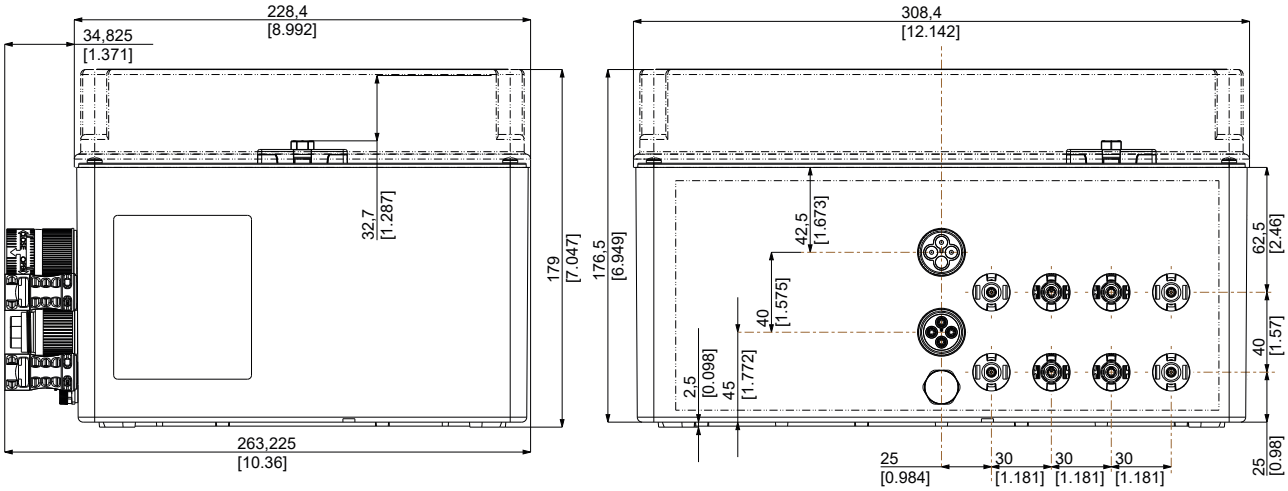

## Features

### Dimensions
FB series - 3 Inputs

Dimension in mm
in [inch]

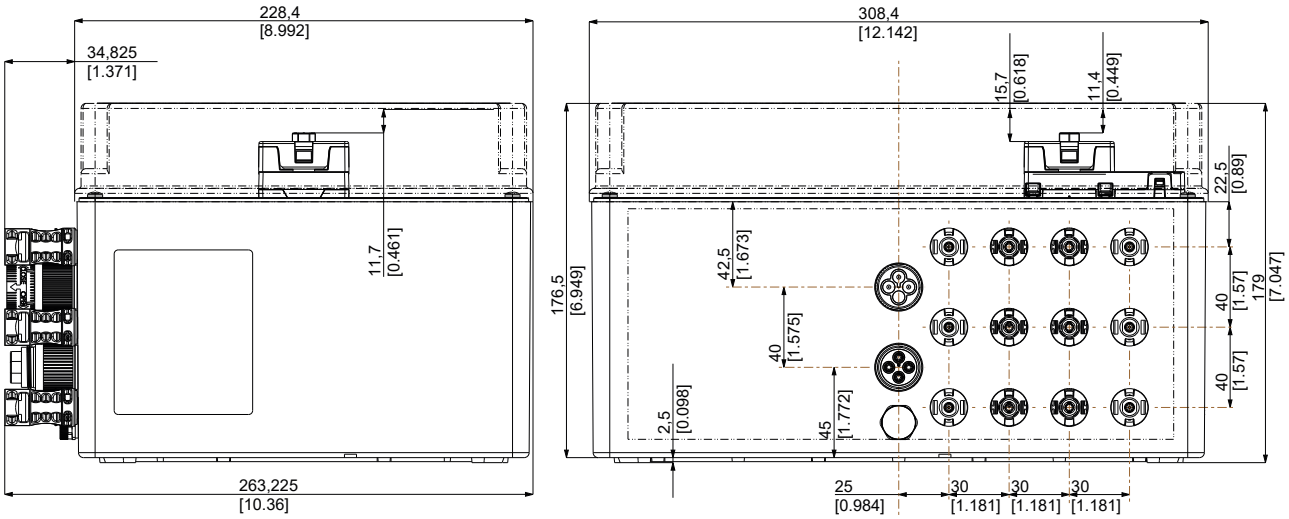


### Dimensions
FB series - 4 Inputs

Dimension in mm
in [inch]

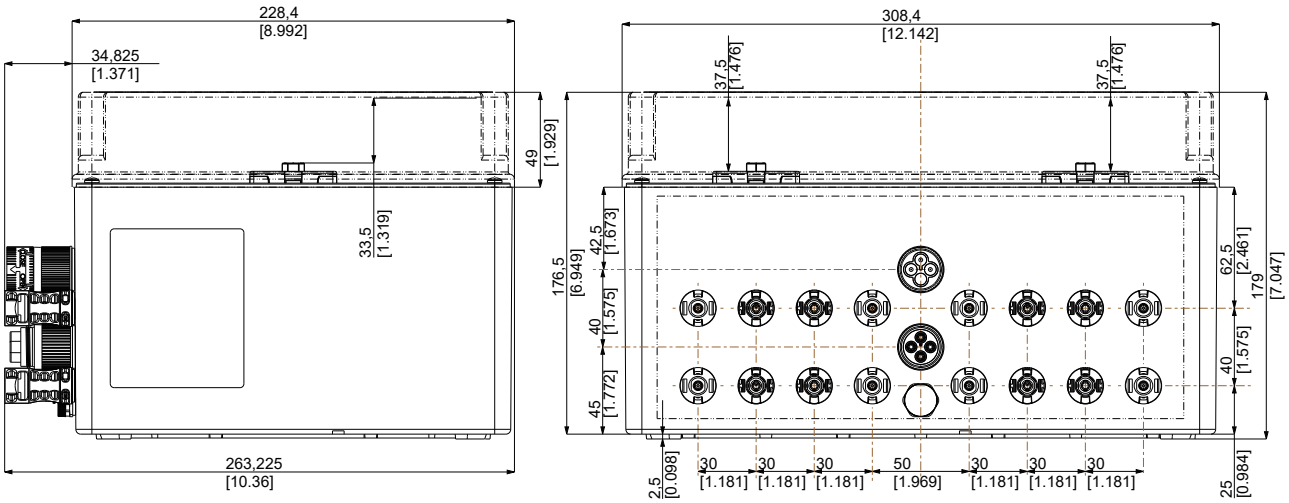

## Features

### Dimensions
FB series - 5 Inputs

Dimension in mm
in [inch]

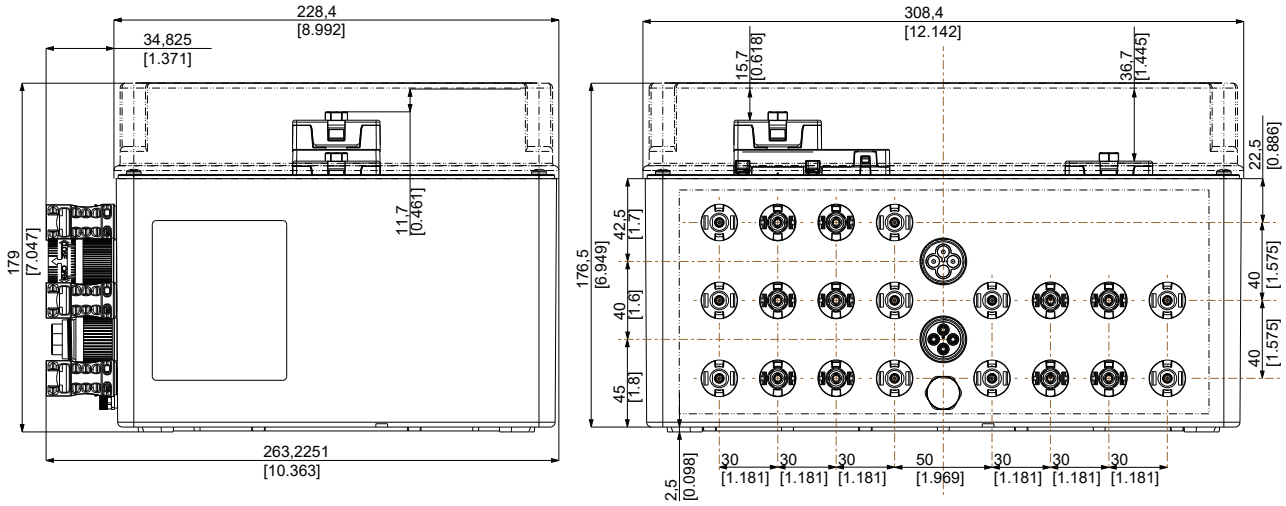


### Dimensions
FB series - 6 Inputs

Dimension in mm
in [inch]

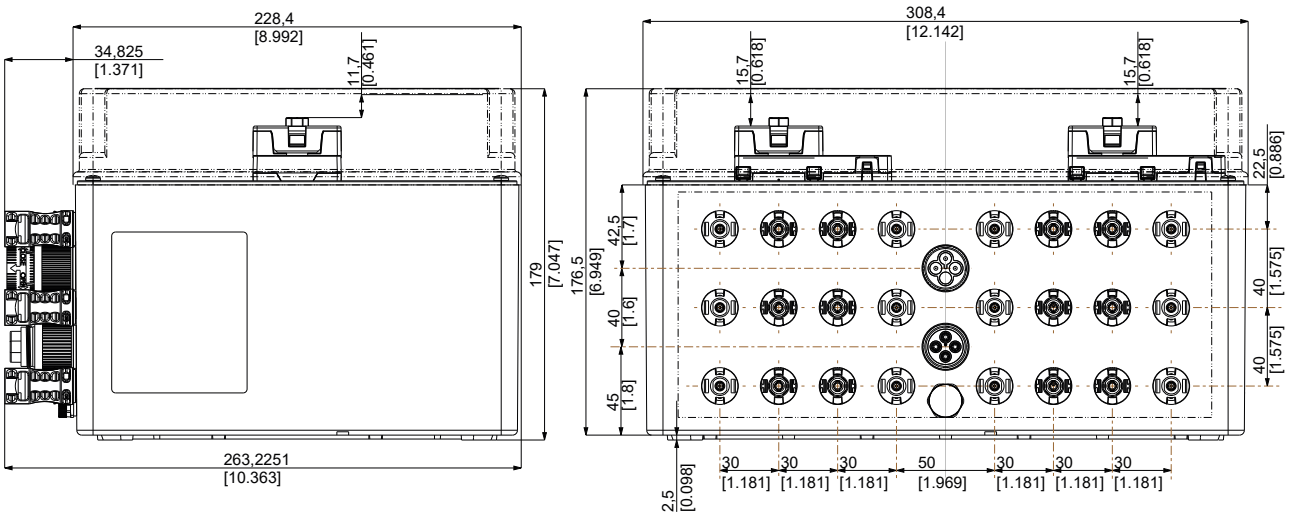

## Dimensions

Wall fixing holes for brackets FB serie - up to 6 inputs

Dimension in mm
in [inch]

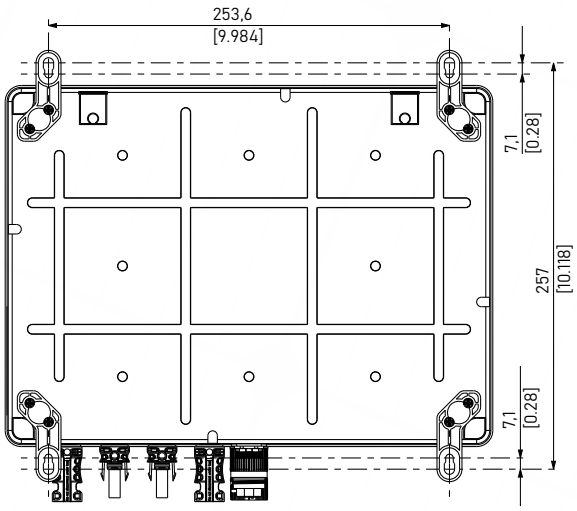


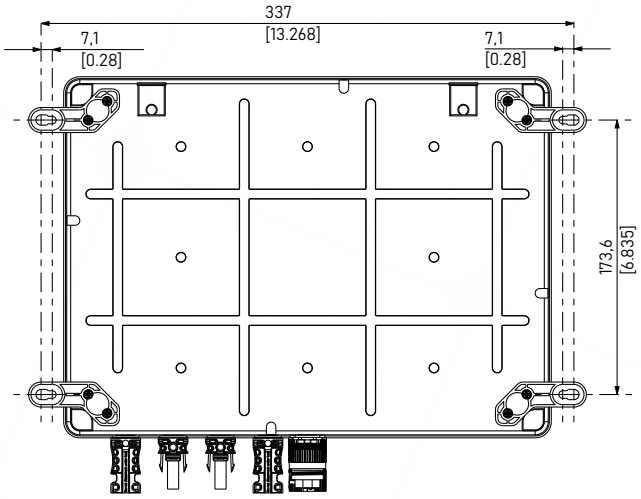

BREMAS

BETTER SWITCHES

# STRING BOXES

## DC, AC/DC and AC boxes up to 22 KW

02

# DC STRING BOXES
DIRECT CURRENT

# AC/DC STRING BOXES
ALTERNATING AND DIRECT CURRENT

# AC STRING BOXES
ALTERNATING CURRENT

**DC String boxes** must be positioned between the strings of PV panels and the inverter, to guarantee **protection** and **isolation** of the connection between the two parts.

The string boxes are made using specific components for the protection and wiring of a **single string, two strings in parallel or two independent strings**. Furthermore, it is possible to request **customized** configurations with wiring adapted to the type of PV system.

Pre-wired string boxes with nominal voltage of **600 Vdc** and **1000 Vdc** are available, with overvoltage protection via **type 2 Surge Protective Devices (SPD)**, overcurrent protection via **fuse holders base (fuses included)**, and isolation via **disconnect switches** specific for **DC-PV1** and **DC-PV2** use categories (according to **IEC EN 60947-3**).

SOLUTIONS

The **AC/DC string boxes** provide **protection** and **isolation** of the **DC** connection between the strings of photovoltaic panels and the inverter, and all the protection and management components of the **AC** connection downstream of the inverter.

Both connections are contained in a **single** cabinet, divided into two sections isolated from each other:

- the DC connection, with nominal voltage of **600 Vdc** and **1000 Vdc**, provides overvoltage protection via type 2 Surge Protective Devices (SPD), overcurrent protection via **fuse holders base (fuses included)**, and isolation via **disconnect switches** specific for **DC-PV1** and **DC-PV2** use categories (according to **IEC EN 60947-3** standard);
- the **AC connection**, for **single-phase up to 230Vac** and **three-phase up to 400Vac** systems, provides overvoltage protection via **type 2 Surge Protective Devices**, and automatic interruption via a **Residual Current Circuit Breaker with Overcurrent Protection (RCBO)**.

Standard electrical cabinets specific to the protection and wiring of **a single string, two strings in parallel**, or **two independent strings**. Furthermore, it is possible to request **customized** configurations with wiring adapted to the type of photovoltaic and electrical systems.

The **AC string boxes** provide **protection** and **management** of the AC connection downstream of the inverter in a photovoltaic system.

**Pre-wired** string boxes for **single-phase up to 230Vac** and **three-phase up to 400Vac** systems type are available, with overvoltage protection via **type 2 Surge Protective Devices (SPD)**, and automatic interruption via **Residual Current Circuit Breaker with Overcurrent Protection (RCBO)**. Furthermore, it is possible to request **customized** configurations with wiring adapted to the type of electrical system.

Installation both **indoors** and **outdoors**, thanks to enclosures made of insulating material with IP65 protection degree.

Electrical cabinets made in compliance with the harmonized technical standards **IEC EN 61439-1/2**.

# DC STRING BOXES

Direct Current

## 1 string 600 Vdc

- 1x DC input - 1x DC output
- 1x disconnect switch, 32 A at 600 Vdc (DC-PV1)
- 1x Surge Protective Device, 600 Vdc, In=18 kA, Type 2
- 1x fuse holder base 1000 Vdc + 2x gPV fuse 20 A
- Enclosure in insulating material, 8 DIN modules, 1 row, IP65

## 1 string 1000 Vdc

- 1x DC input - 1x DC output
- 1x disconnect switch, 30 A at 1000 Vdc (DC-PV1)
- 1x Surge Protective Device, 1000 Vdc, In=18 kA, Type 2
- 1x fuse holder base 1000 Vdc + 2x gPV fuse 20 A
- Enclosure in insulating material, 8 DIN modules, 1 row, IP65

DC

## 2 parallel strings 600 Vdc

- 2x DC inputs - 1x DC output
- 1x disconnect switch, 32 A at 600 Vdc (DC-PV1)
- 1x Surge Protective Device, 600 Vdc, In=18 kA, Type 2
- 2x fuse holder base 1000 Vdc + 4x gPV fuse 20 A
- Enclosure in insulating material 12 DIN modules, 1 row, IP65

## 2 parallel strings 1000 Vdc

- 2x DC inputs - 1x DC output
- 1x disconnect switch, 30 A at 1000 Vdc (DC-PV1)
- 1x Surge Protective Device, 1000 Vdc, In=18 kA, Type 2
- 2x fuse holder base 1000 Vdc + 4x gPV fuse 20 A
- Enclosure in insulating material 12 DIN modules, 1 row, IP65

## 2 single strings 600 Vdc

- 2x DC inputs - 2x DC outputs
- 2x disconnect switch, 32 A at 600 Vdc (DC-PV1)
- 2x Surge Protective Device, 600 Vdc, In=18 kA, Type 2
- 2x fuse holder base 1000 Vdc + 4x gPV fuse 20 A
- Enclosure in insulating material 24 DIN modules, 2 rows, IP65

## 2 single strings 1000 Vdc

- 2x DC inputs - 2x DC outputs
- 2x disconnect switch, 30 A at 1000 Vdc (DC-PV1)
- 2x Surge Protective Device, 1000 Vdc, In=18 kA, Type 2
- 2x fuse holder base 1000 Vdc + 4x gPV fuse 20 A
- Enclosure in insulating material 24 DIN modules, 2 rows, IP65

# AC/DC STRING BOXES

Alternating and Direct Current

## Single-phase 16 A - 1 string 600 Vdc

AC connection

- 1x AC input - 1x AC output
- 1x automatic Residual Current Circuit Breaker (300 mA - Class A) with Overcurrent Protection (16 A - Curve C)
- 1x 230 Vac Surge Protective Device, Type 2, for single-phase TT-TN systems

DC connection

- 1x DC input - 1x DC output
- 1x disconnect switch, 32 A at 600 Vdc (DC-PV1)
- 1x Surge Protective Device, 600 Vdc, In=18 kA, Type 2
- 1x fuse holder base 1000 Vdc + 2x gPV fuse 20 A

Box

- Enclosure in insulating material 24 DIN modules, 2 rows, IP65

## Single-phase 16 A - 1 string 1000 Vdc

AC connection

- 1x AC input - 1x AC output
- 1x automatic Residual Current Circuit Breaker (300 mA - Class A) with Overcurrent Protection (16 A - Curve C)
- 1x 230 Vac Surge Protective Device, Type 2, for single-phase TT-TN systems

DC connection

- 1x DC input - 1x DC output
- 1x disconnect switch, 30 A at 1000 Vdc (DC-PV1)
- 1x Surge Protective Device, 1000 Vdc, In=18 kA, Type 2
- 1x fuse holder base 1000 Vdc + 2x gPV fuse 20 A

Box

- Enclosure in insulating material 24 DIN modules, 2 rows, IP65

AC

DC

## Single-phase 25 A - 2 parallel strings 600 Vdc

### AC connection

- 1x AC input - 1x AC output
- 1x automatic Residual Current Circuit Breaker (300 mA - Class A) with Overcurrent Protection (25 A - Curve C)
- 1x 230 Vac Surge Protective Device, Type 2, for single-phase TT-TN systems

### DC connection

- 2x DC inputs - 1x DC output
- 1x disconnect switch, 32 A at 600 Vdc (DC-PV1)
- 1x Surge Protective Device, 600 Vdc, In=18 kA, Type 2
- 2x fuse holder base 1000 Vdc + 4x gPV fuse 20 A

### Box

- Enclosure in insulating material 24 DIN modules, 2 rows, IP65

## Single-phase 25 A - 2 parallel strings 1000 Vdc

### AC connection

- 1x AC input - 1x AC output
- 1x automatic Residual Current Circuit Breaker (300 mA - Class A) with Overcurrent Protection (25 A - Curve C)
- 1x 230 Vac Surge Protective Device, Type 2, for single-phase TT-TN systems

### DC connection

- 2x DC inputs - 1x DC output
- 1x disconnect switch, 30 A at 1000 Vdc (DC-PV1)
- 1x Surge Protective Device, 1000 Vdc, In=18 kA, Type 2
- 2x fuse holder base 1000 Vdc + 4x gPV fuse 20 A

### Box

- Enclosure in insulating material 24 DIN modules, 2 rows, IP65

## Single-phase 32 A - 2 single strings 600 Vdc

### AC connection

- 1x AC input - 1x AC output
- 1x automatic Residual Current Circuit Breaker (300 mA - Class A) with Overcurrent Protection (32 A - Curve C)
- 1x 230 Vac Surge Protective Device, Type 2, for single-phase TT-TN systems

### DC connection

- 2x DC inputs - 2x DC outputs
- 2x disconnect switch, 32 A at 600 Vdc (DC-PV1)
- 2x surge arrester, 600 Vdc, In=18 kA, Type 2
- 2x fuse holder base 1000 Vdc + 4x gPV fuse 20 A

### Box

- Enclosure in insulating material 24 DIN modules, 2 rows, IP65

## Single-phase 32 A - 2 single strings 1000 Vdc

### AC connection

- 1x AC input - 1x AC output
- 1x automatic Residual Current Circuit Breaker (300 mA - Class A) with Overcurrent Protection (32 A - Curve C)
- 1x 230 Vac Surge Protective Device, Type 2, for single-phase TT-TN systems

### DC connection

- 2x DC inputs - 2x DC outputs
- 2x disconnect switch, 30 A a 1000 Vdc (DC-PV1)
- 2x Surge Protective Device, 1000 Vdc, In=18 kA, Type 2
- 2x fuse holder base 1000 Vdc + 4x gPV fuse 20 A

### Box

- Enclosure in insulating material 24 DIN modules, 2 rows, IP65

## Three-phase 20 A - 1 string 600 Vdc

AC connection
- 1x AC input - 1x AC output
- 1x automatic Residual Current Circuit Breaker (300 mA - Class A) with Overcurrent Protection (20 A - Curve C)
- 1x 400 Vac Surge Protective Device, Type 2, for three-phase TT-TN systems

DC connection
- 1x DC input - 1x DC output
- 1x disconnect switch, 32 A at 600 Vdc (DC-PV1)
- 1x Surge Protective Device, 600 Vdc, In=18 kA, Type 2
- 1x fuse holder base 1000 Vdc + 2x gPV fuse 20 A

Box
- Enclosure in insulating material 24 DIN modules, 2 rows, IP65

## Three-phase 20 A - 1 string 1000 Vdc

AC connection
- 1x AC input - 1x AC output
- 1x automatic Residual Current Circuit Breaker (300 mA - Class A) with Overcurrent Protection (20 A - Curve C)
- 1x 400 Vac Surge Protective Device, Type 2, for three-phase TT-TN systems

DC connection
- 1x DC input - 1x DC output
- 1x disconnect switch, 30 A at 1000 Vdc (DC-PV1)
- 1x Surge Protective Device, 1000 Vdc, In=18 kA, Type 2
- 1x fuse holder base 1000 Vdc + 2x gPV fuse 20 A

Box
- Enclosure in insulating material 24 DIN modules, 2 rows, IP65

## Three-phase 32 A - 1 string 600 Vdc

### AC connection
- 1x AC input - 1x AC output
- 1x automatic Residual Current Circuit Breaker (300 mA - Class A) with Overcurrent Protection (32 A - Curve C)
- 1x 400 Vac Surge Protective Device, Type 2, for three-phase TT-TN systems

### DC connection
- 1x DC inputs - 1x DC output
- 1x disconnect switch, 32 A at 600 Vdc (DC-PV1)
- 1x Surge Protective Device, 600 Vdc, In=18 kA, Type 2
- 1x fuse holder base 1000 Vdc + 2x gPV fuse 20 A

### Box
- Enclosure in insulating material 24 DIN modules, 2 rows, IP65

## Three-phase 32 A - 1 string 1000 Vdc

### AC connection
- 1x AC input - 1x AC output
- 1x automatic Residual Current Circuit Breaker (300 mA - Class A) with Overcurrent Protection (32 A - Curve C)
- 1x 400 Vac Surge Protective Device, Type 2, for three-phase TT-TN systems

### DC connection
- 1x DC inputs - 1x DC output
- 1x disconnect switch, 30 A at 1000 Vdc (DC-PV1)
- 1x Surge Protective Device, 1000 Vdc, In=18 kA, Type 2
- 1x fuse holder base 1000 Vdc + 2x gPV fuse 20 A

### Box
- Enclosure in insulating material 24 DIN modules, 2 rows, IP65

## Three-phase 32 A - 2 single strings 600 Vdc

### AC connection
- 1x AC input - 1x AC output
- 1x automatic Residual Current Circuit Breaker (300 mA - Class A) with Overcurrent Protection (32 A - Curve C)
- 1x 400 Vac Surge Protective Device, Type 2, for three-phase TT-TN systems

### DC connection
- 2x DC inputs - 2x DC outputs
- 2x disconnect switch, 32 A at 600 Vdc (DC-PV1)
- 2x surge arrester, 600 Vdc, In=18 kA, Type 2
- 2x fuse holder base 1000 Vdc + 2x gPV fuse 20 A

### Box
- Enclosure in insulating material 36 DIN modules, 2 rows, IP65

## Three-phase 32 A - 2 single strings 1000 Vdc

### AC connection
- 1x AC input - 1x AC output
- 1x automatic Residual Current Circuit Breaker (300 mA - Class A) with Overcurrent Protection (32 A - Curve C)
- 1x 400 Vac Surge Protective Device, Type 2, for three-phase TT-TN systems

### DC connection
- 2x DC inputs - 2x DC outputs
- 2x disconnect switch, 30 A a 1000 Vdc (DC-PV1)
- 2x Surge Protective Device, 1000 Vdc, In=18 kA, Type 2
- 2x fuse holder base 1000 Vdc + 2x gPV fuse 20 A

### Box
- Enclosure in insulating material 36 DIN modules, 2 rows, IP65

# AC STRING BOXES
Alternating Current

## Single-phase 16 A

- 1x AC input - 1x AC output
- 1x automatic Residual Current Circuit Breaker (300 mA - Class A) with Overcurrent Protection (16 A - Curve C)
- 1x 230 Vac Surge Protective Device, Type 2, for single-phase TT-TN systems
- Enclosure in insulating material, 8 DIN modules, 1 row, IP65

## Single-phase 25 A

- 1x AC input - 1x AC output
- 1x automatic Residual Current Circuit Breaker (300 mA - Class A) with Overcurrent Protection (25 A - Curve C)
- 1x 230 Vac Surge Protective Device, Type 2, for single-phase TT-TN systems
- Enclosure in insulating material, 8 DIN modules, 1 row, IP65

## Single-phase 32 A

- 1x AC input - 1x AC output
- 1x automatic Residual Current Circuit Breaker (300 mA - Class A) with Overcurrent Protection (32 A - Curve C)
- 1x 230 Vac Surge Protective Device, Type 2, for single-phase TT-TN systems
- Enclosure in insulating material, 8 DIN modules, 1 row, IP65

AC

## Three-phase 20 A

### AC connection

- 1x AC input - 1x AC output
- 1x automatic Residual Current Circuit Breaker (300 mA - Class A) with Overcurrent Protection (20 A - Curve C)
- 1x 400 Vac Surge Protective Device, Type 2, for three-phase TT-TN systems

### Box

- Enclosure in insulating material 12 DIN modules, 1 row, IP65

## Three-phase 32 A

### AC connection

- 1x AC input - 1x AC output
- 1x automatic Residual Current Circuit Breaker (300 mA - Class A) with Overcurrent Protection (32 A - Curve C)
- 1x 400 Vac Surge Protective Device, Type 2, for three-phase TT-TN systems

### Box

- Enclosure in insulating material 12 DIN modules, 1 row, IP65

# DC String boxes

| Application | Description | DC Side | | | Code |
|---|---|---|---|---|---|
| DC | 1 string | 600 Vdc | 32 A | PV1 | MBD06A11T2F20 |
| DC | 2 parallel strings | | | | MBD06A21T2F20 |
| DC | 2 single strings | | | | MBD06A22T2F20 |
| DC | 1 string | 1000 Vdc | 30 A | PV1 | MBD10A11T2F20 |
| DC | 2 parallel strings | | | | MBD10A21T2F20 |
| DC | 2 single strings | | | | MBD10A22T2F20 |

# AC/DC String boxes

| Application | Description | DC Side | | | Code |
|---|---|---|---|---|---|
| AC/DC | Single-phase 16 A - 1 string | 600 Vdc | 32 A | PV1 | MBX06A11T2F20M16 |
| AC/DC | Single-phase 25 A - 2 parallel strings | | | | MBX06A21T2F20M25 |
| AC/DC | Single-phase 32 A - 2 single strings | | | | MBX06A22T2F20M32 |
| AC/DC | Single-phase 16 A - 1 string | 1000 Vdc | 30 A | PV1 | MBX10A11T2F20M16 |
| AC/DC | Single-phase 25 A - 2 parallel strings | | | | MBX10A21T2F20M25 |
| AC/DC | Single-phase 32 A - 2 single strings | | | | MBX10A22T2F20M32 |
| AC/DC | Three-phase 20 A - 1 string | 600 Vdc | 32 A | PV1 | MBX06A11T2F20T20 |
| AC/DC | Three-phase 20 A - 1 string | | | | MBX06A11T2F20T32 |
| AC/DC | Three-phase 32 A - 2 single strings | | | | MBX06A22T2F20T32 |
| AC/DC | Three-phase 20 A - 1 string | 1000 Vdc | 30 A | PV1 | MBX10A11T2F20T20 |
| AC/DC | Three-phase 20 A - 1 string | | | | MBX10A11T2F20T32 |
| AC/DC | Three-phase 32 A - 2 single strings | | | | MBX10A22T2F20T32 |

# AC String boxes

| Application | Description | Code |
|---|---|---|
| **AC** | Single-phase 16 A | **MBAM16T2** |
| **AC** | Single-phase 25 A | **MBAM25T2** |
| **AC** | Single-phase 32 A | **MBAM32T2** |
| **AC** | Three-phase 20 A | **MBAT20T2** |
| **AC** | Three-phase 32 A | **MBAT32T2** |

# String boxes composition

| Code | Enclosure dimension (lxhxp mm) | DC switches | DC fuse holders | DC fuses | DC surge protecion devices | AC surge protection devices | AC RCBOs |
|---|---|---|---|---|---|---|---|
| **MBD06A11T2F20** | 215x190x100 | 1x DM100201E0ADRLE | 1x FHPV1002P | 2x F1038PV20 | 1x SA2PV060T2 | | |
| **MBD06A21T2F20** | 317x250x140 | 1x DM100201E0ADRLE | 2x FHPV1002P | 4x F1038PV20 | 1x SA2PV060T2 | | |
| **MBD06A22T2F20** | 317x420x140 | 2x DM100201E0ADRLE | 2x FHPV1002P | 4x F1038PV20 | 2x SA2PV060T2 | | |
| **MBD10A11T2F20** | 215x190x100 | 1x DX120301E0ADRLE | 1x FHPV1002P | 2x F1038PV20 | 1x SA2PV100T2 | | |
| **MBD10A21T2F20** | 317x250x140 | 1x DX120301E0ADRLE | 2x FHPV1002P | 4x F1038PV20 | 1x SA2PV100T2 | | |
| **MBD10A22T2F20** | 317x420x140 | 2x DX120301E0ADRLE | 2x FHPV1002P | 4x F1038PV20 | 2x SA2PV100T2 | | |
| **MBX06A11T2F20M16** | 317x420x140 | 1x DM100201E0ADRLE | 1x FHPV1002P | 2x F1038PV20 | 1x SA2PV060T2 | 1x SA40T2A1N032 | 1x SR06AC1NC16A300 |
| **MBX06A21T2F20M25** | 317x420x140 | 1x DM100201E0ADRLE | 2x FHPV1002P | 4x F1038PV20 | 1x SA2PV060T2 | 1x SA40T2A1N032 | 1x SR06AC1NC25A300 |
| **MBX06A22T2F20M32** | 317x420x140 | 2x DM100201E0ADRLE | 2x FHPV1002P | 4x F1038PV20 | 2x SA2PV060T2 | 1x SA40T2A1N032 | 1x SR06AC1NC32A300 |
| **MBX10A11T2F20M16** | 317x420x140 | 1x DX120301E0ADRLE | 1x FHPV1002P | 2x F1038PV20 | 1x SA2PV100T2 | 1x SA40T2A1N032 | 1x SR06AC1NC16A300 |
| **MBX10A21T2F20M25** | 317x420x140 | 1x DX120301E0ADRLE | 2x FHPV1002P | 4x F1038PV20 | 1x SA2PV100T2 | 1x SA40T2A1N032 | 1x SR06AC1NC25A300 |
| **MBX10A22T2F20M32** | 317x420x140 | 2x DX120301E0ADRLE | 2x FHPV1002P | 4x F1038PV20 | 2x SA2PV100T2 | 1x SA40T2A1N032 | 1x SR06AC1NC32A300 |
| **MBX06A11T2F20T20** | 317x420x140 | 1x DM100201E0ADRLE | 1x FHPV1002P | 2x F1038PV20 | 1x SA2PV060T2 | 1x SA40T2A3N032 | 1x SR06AC3NC20A300 |
| **MBX06A11T2F20T32** | 317x420x140 | 1x DM100201E0ADRLE | 2x FHPV1002P | 4x F1038PV20 | 1x SA2PV060T2 | 1x SA40T2A3N032 | 1x SR06AC3NC32A300 |
| **MBX06A22T2F20T32** | 424x460x140 | 2x DM100201E0ADRLE | 2x FHPV1002P | 4x F1038PV20 | 2x SA2PV060T2 | 1x SA40T2A3N032 | 1x SR06AC3NC32A300 |
| **MBX10A11T2F20T20** | 317x420x140 | 1x DX120301E0ADRLE | 1x FHPV1002P | 2x F1038PV20 | 1x SA2PV100T2 | 1x SA40T2A3N032 | 1x SR06AC3NC20A300 |
| **MBX10A11T2F20T32** | 317x420x140 | 1x DX120301E0ADRLE | 2x FHPV1002P | 4x F1038PV20 | 1x SA2PV100T2 | 1x SA40T2A3N032 | 1x SR06AC3NC32A300 |
| **MBX10A22T2F20T32** | 424x460x140 | 2x DX120301E0ADRLE | 2x FHPV1002P | 4x F1038PV20 | 2x SA2PV100T2 | 1x SA40T2A3N032 | 1x SR06AC3NC32A300 |
| **MBAM16T2** | 215x190x100 | | | | | 1x SA40T2A1N032 | 1x SR06AC1NC16A300 |
| **MBAM25T2** | 215x190x100 | | | | | 1x SA40T2A1N032 | 1x SR06AC1NC25A300 |
| **MBAM32T2** | 215x190x100 | | | | | 1x SA40T2A1N032 | 1x SR06AC1NC32A300 |
| **MBAT20T2** | 317x250x140 | | | | | 1x SA40T2A3N032 | 1x SR06AC3NC20A300 |
| **MBAT32T2** | 317x250x140 | | | | | 1x SA40T2A3N032 | 1x SR06AC3NC32A300 |

## Electrical circuit

### DC String boxes - 1 String

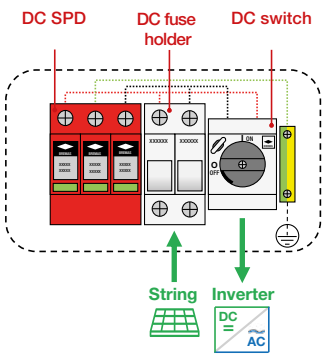


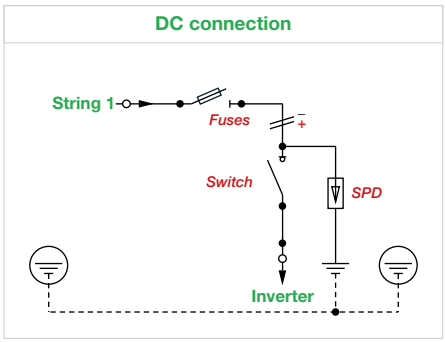


### DC String boxes - 2 Parallel strings

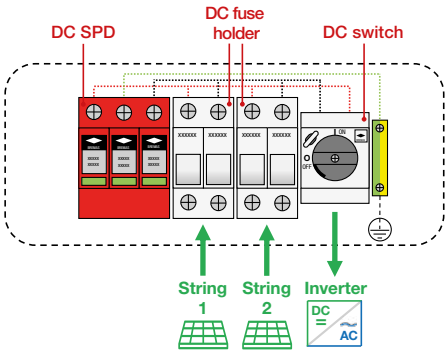


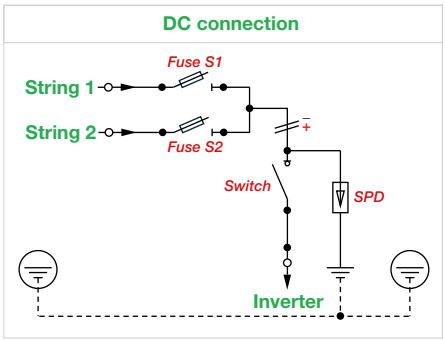


### DC String boxes - 2 Single strings

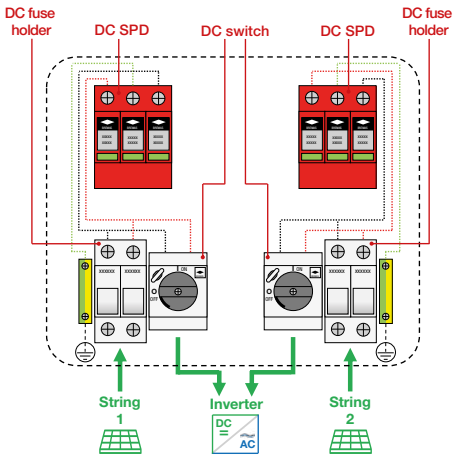


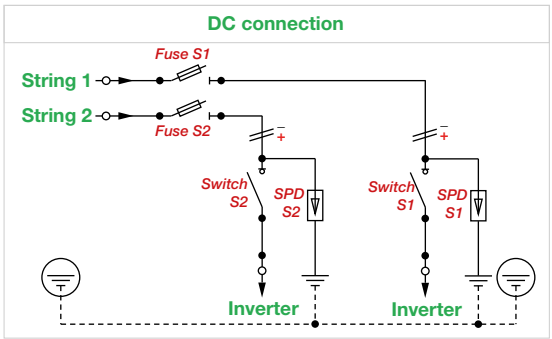

## AC/DC String boxes - Single-phase, 1 String

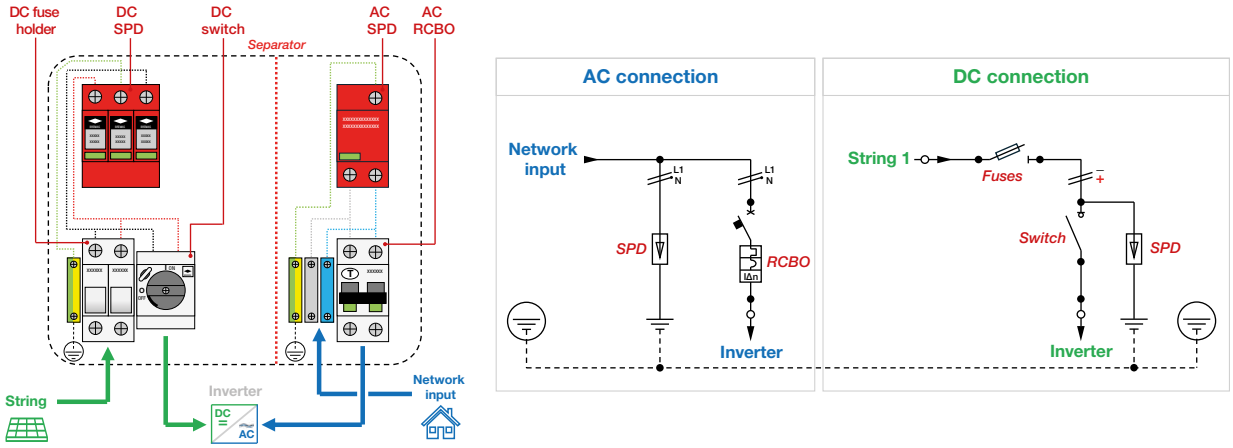


## AC/DC String boxes - Single-phase, 2 Parallel strings

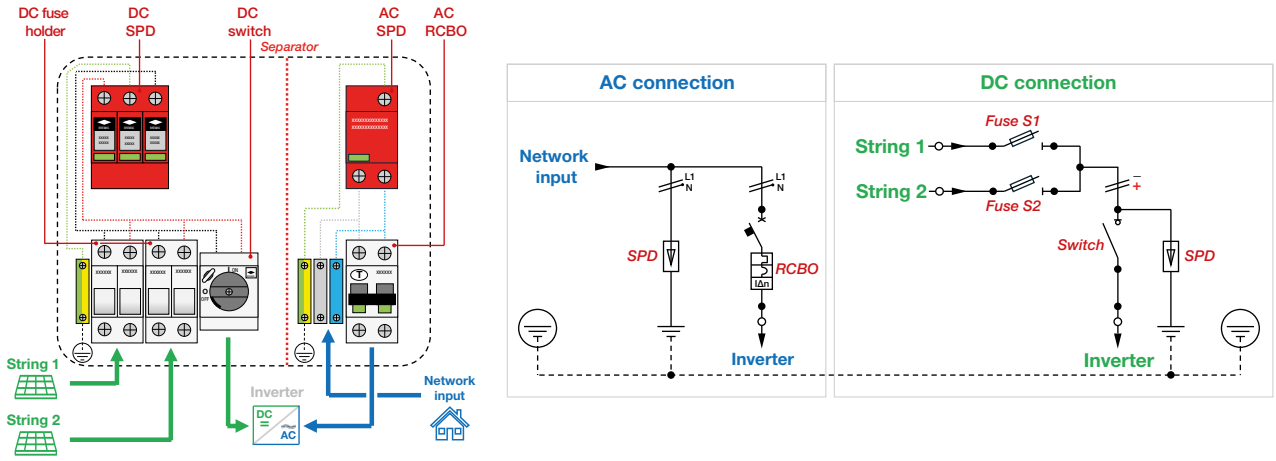


## AC/DC String boxes - Single-phase, 2 Single strings

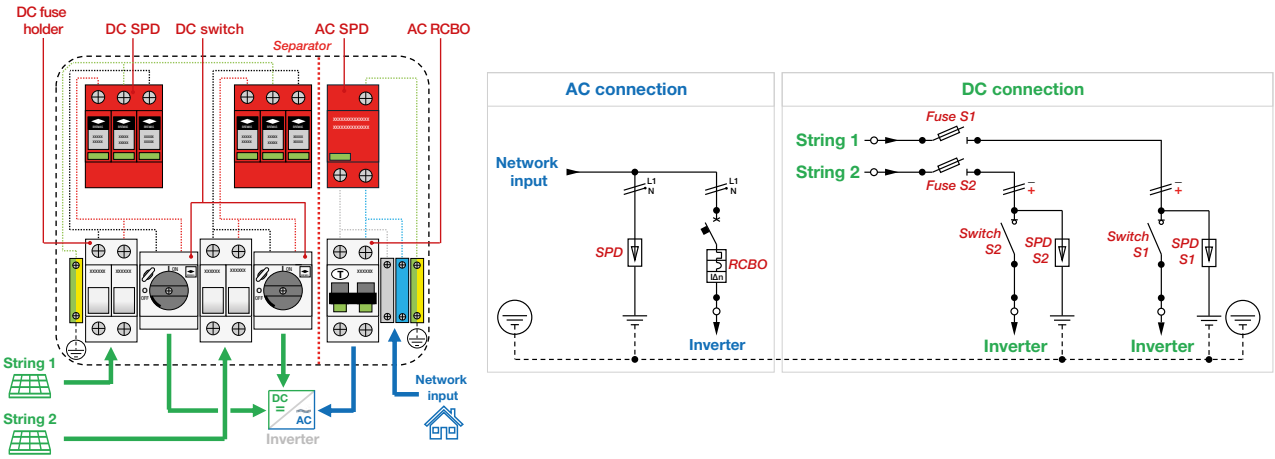

## AC/DC String boxes - Three-phase, 1 String

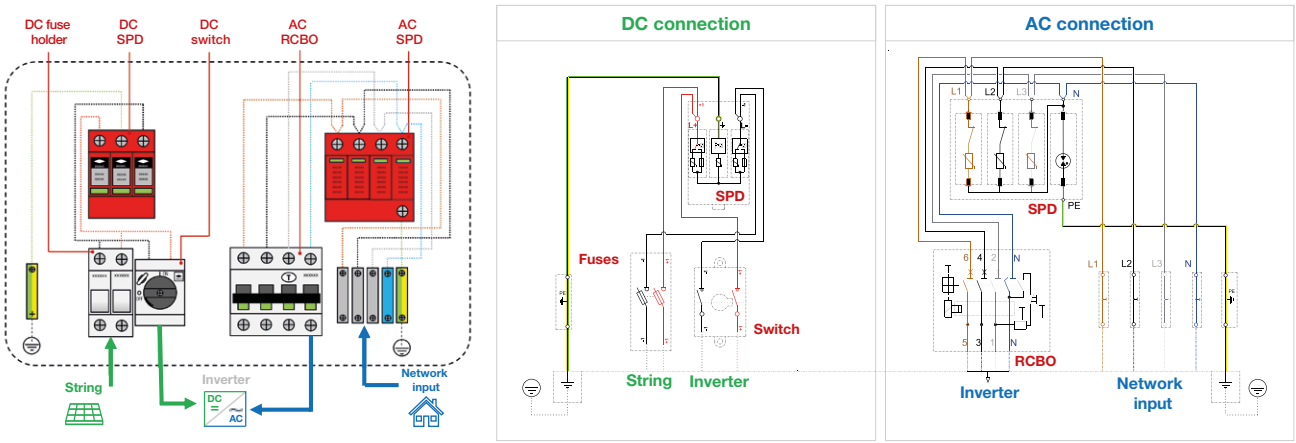


## AC/DC String boxes - Three-phase, 2 Single strings

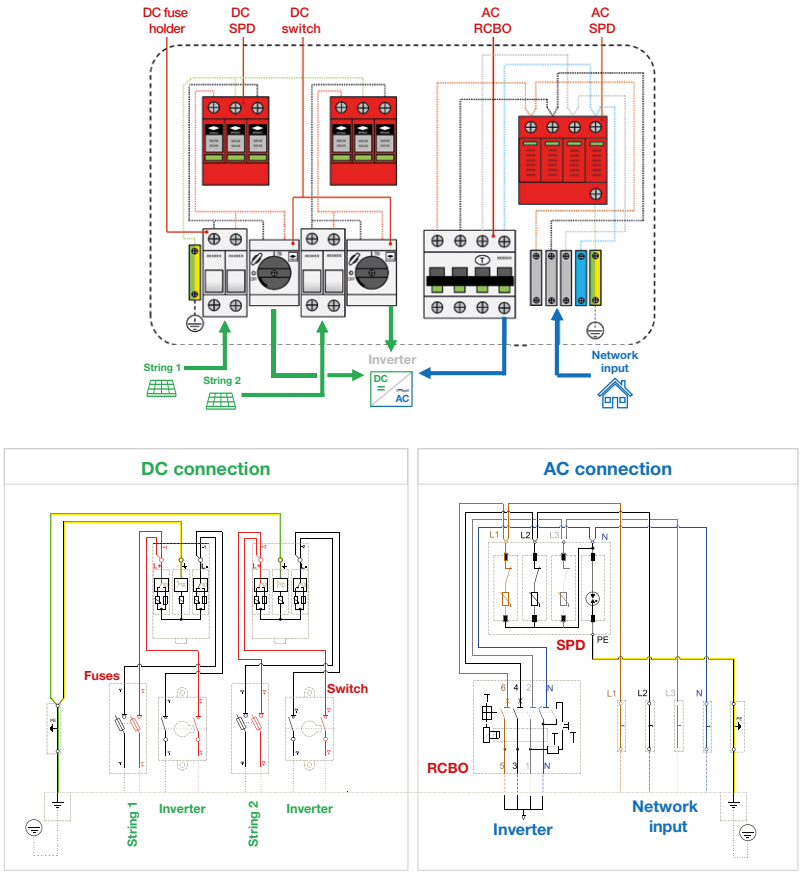

## AC String boxes - Single-phase, 16-25-32 A

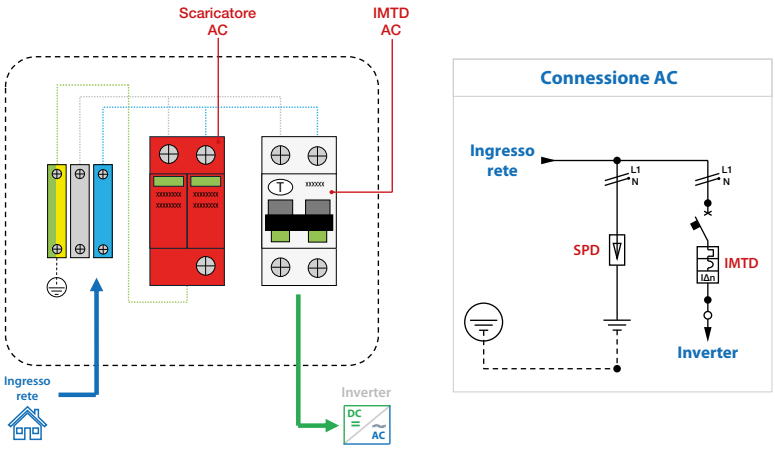


## AC String boxes - Three-phase, 20-32 A

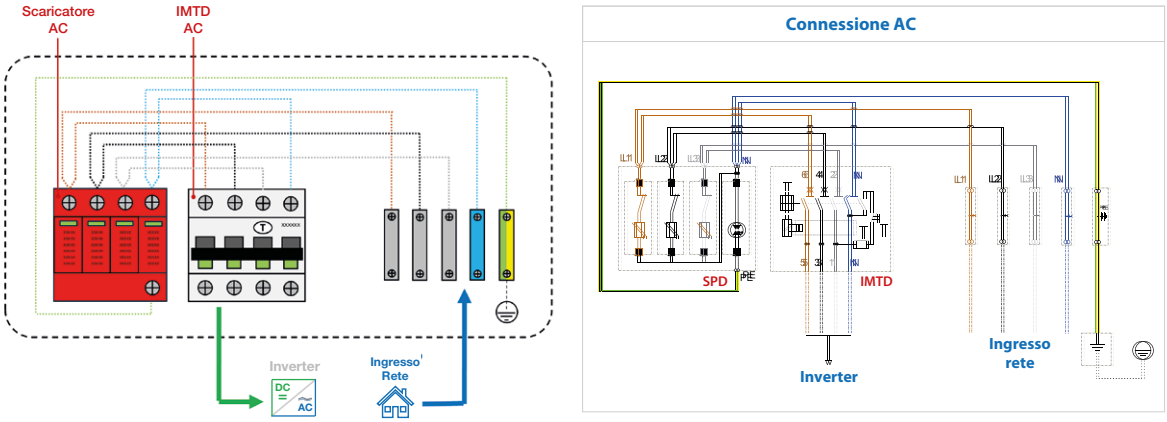

## Features

### Dimensions
MB series - Size 1

Dimension in mm
in [inch]

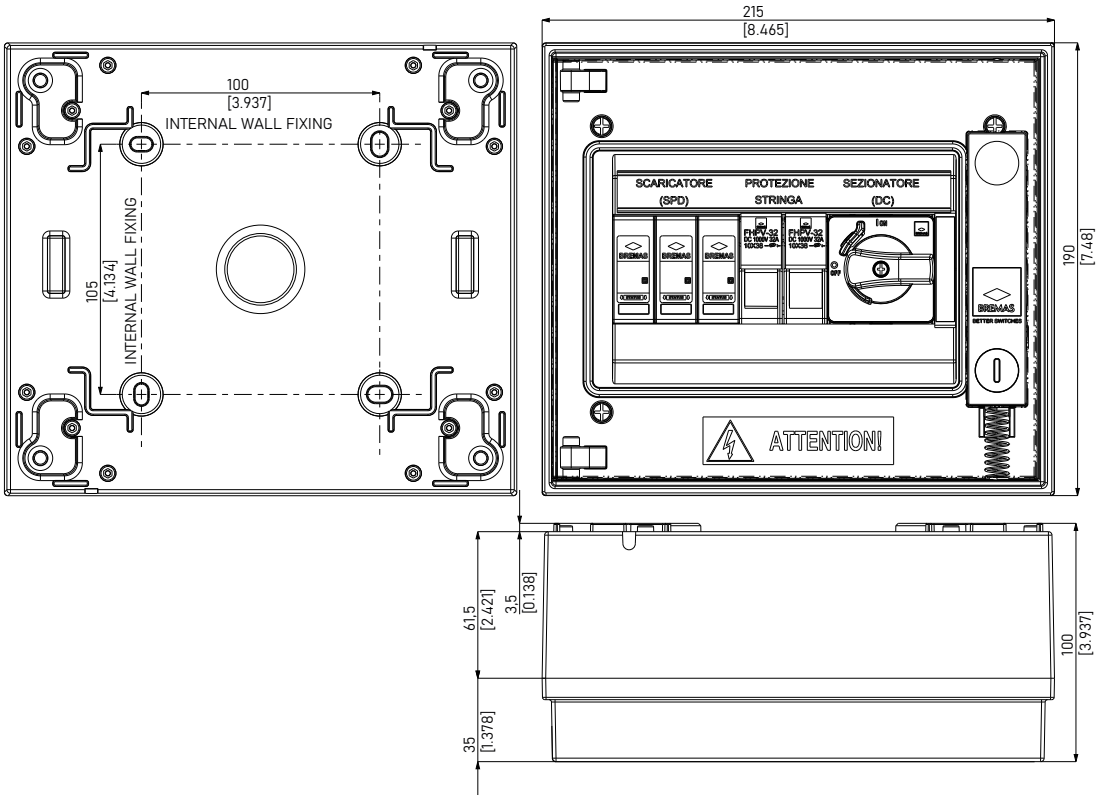


### Dimensions
MB series - Size 2

Dimension in mm
in [inch]

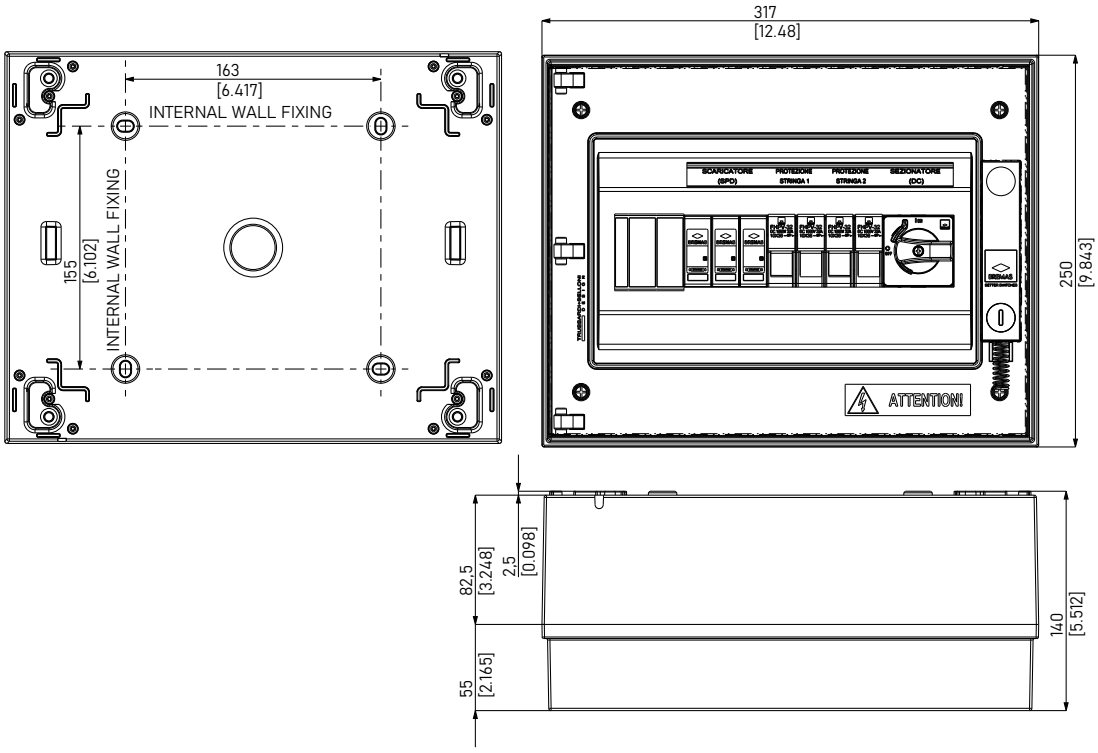

## Dimensions
MB series - Size 3

Dimension in mm
in [inch]

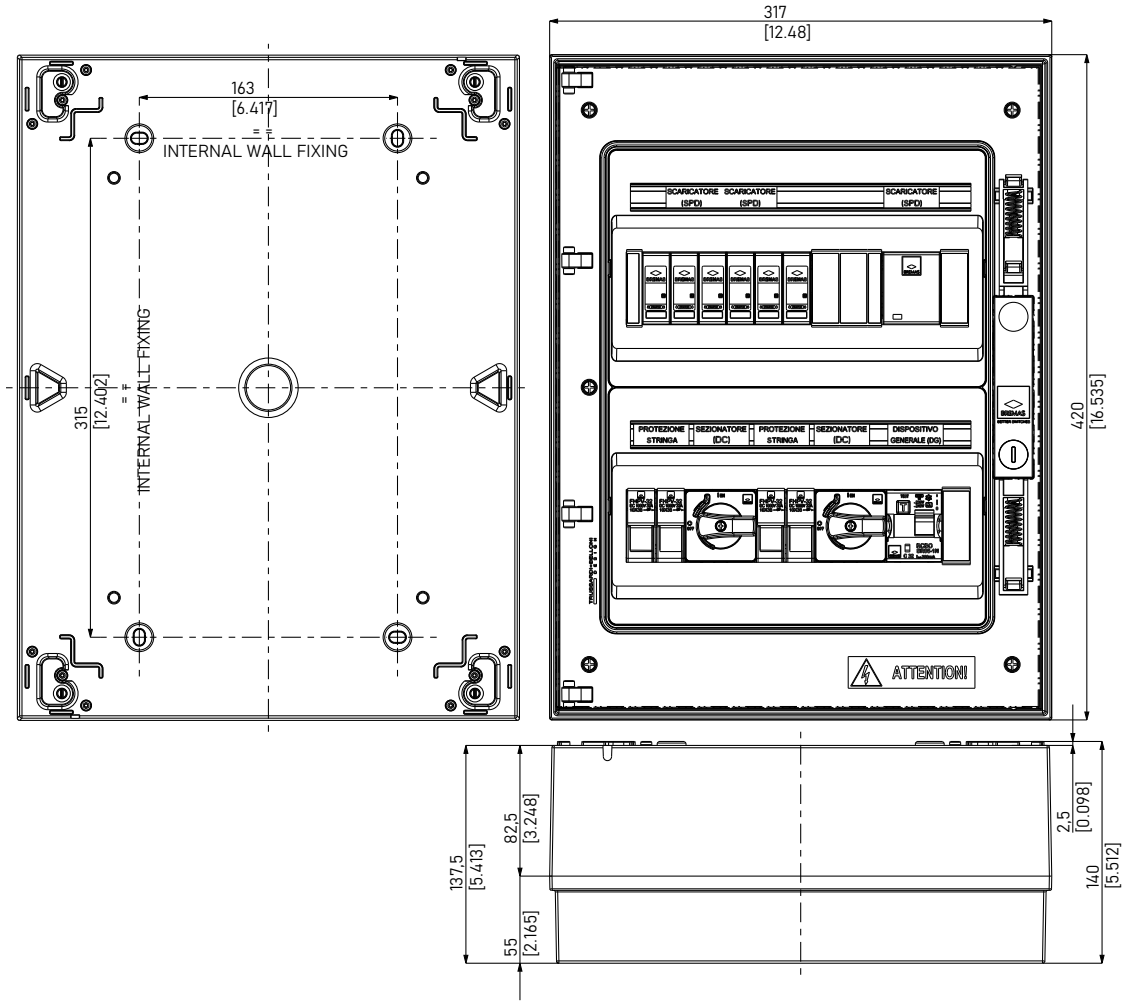

## Dimensions
MB series - Size 4

Dimension in mm
in [inch]

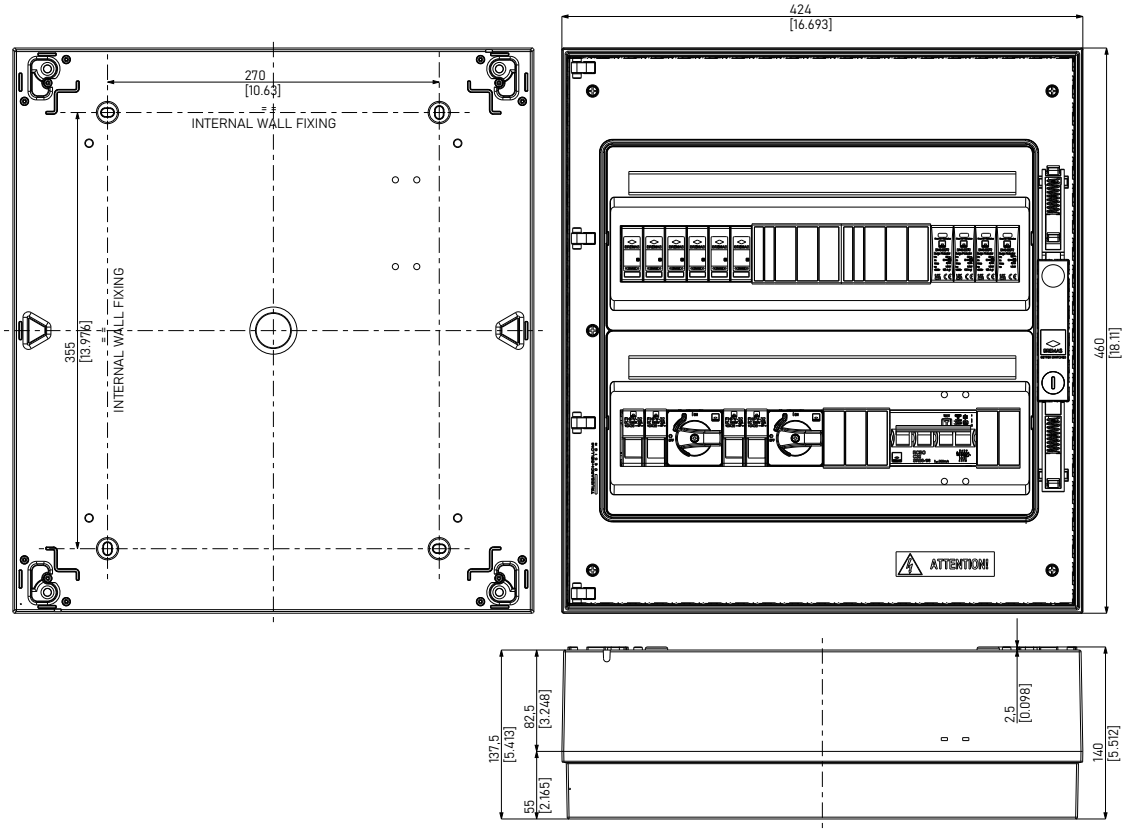

BREMAS

BETTER SWITCHES

# DC DISCONNECT SWITCHES

## DC switches up to 1500 Vdc 30A and 1000 Vdc 60A PV1

03

# DP-DK-DM-DX-DU SERIES

DC disconnect switches

## Highest standards of quality

The Bremas **DP-DK-DM-DX-DU** series of disconnect switches has been specifically designed for DC applications in the solar industry, with the most compact dimensions and the highest switching power on the market. Capable of breaking 60 A and 1000 Vdc, or 30 A at 1500 Vdc, with only 45 mm (1,77") of total depth, the **DP-DK-DM-DX-DU** series is the most complete and versatile range of disconnect switches for the solar industry.

- Rated current: 60 A
- Rated insulation voltage: 1500 V
- PV1 and PV2 tested
- Terminal protection degree IP20
- Different mounting possibilities
- Padlockable handles and knobs
- IP66, NEMA 4X and IP67

Up to
**1500** Vdc - **30** A
**1000** Vdc - **60** A

## Code structure

| DX | 150 | 30 | 1 | 2U | A | L | MVU5 | E |
|---|---|---|---|---|---|---|---|---|
| Series | Rated Voltage | Rated Current | N° of inputs | Poles configuration | Handle position | Mounting type | Plate and/ or knob | Suffixes (optional) |

# A complete range for DC applications

DC
Disconnect
Switches

### Selected materials
The materials we employ have been carefully studied: the contacts are built with an exclusive alloy specifically made. The plastic components are made with V0 materials, the highest self-extinguishing degree. The handles are made with UV rays resistant materials.

### Designed for the inverters of the next generation
Thanks to the modular construction, a single switch can manage up to 8 DC inputs/MPPT, and up to 16 poles.

### Best powerful contact system
Reduced the time of the electric arc and better guarantees its fast extinction.

### Worldwide installations
Certified according to the European standard IEC EN 60947 (TÜV), the Chinese regulation (CCC), the American standard (UL), and the Australian standard (RCM).

5 PATENTS
+
3 PATENTS
Pending

### 5 Patents
The 5 Patents that protecting our DC disconnect switches are the result of our continuous R&D effort.

### Easy identification to positive (+) and negative (-) inputs
RED for Positive inputs/outputs. BLACK for Negative inputs/outputs.

### Connection and easy wiring
The patented contacts solution permits to connect both the input and output cables in a linear way. The connecting terminals assure a trouble-free use of the screwdriver both in case of panel and base mounting. Designed for an optimal space exploitation: wires do not interfere with each other even in case of mounting adjacent to walls or other devices.

# DP-DK-DM-DX Series - Product range for IEC market

| Poles | Description | | Series |
|---|---|---|---|
| 1+1 | 1000 Vdc | 12 A | DP10012 |
| | 750 Vdc | 25 A | |
| | 600 Vdc | 32 A | |
| 1+1 | 1200 Vdc | 8 A | DK10016 |
| | 1000 Vdc | 16 A | |
| | 750 Vdc | 32 A | |
| | 500 Vdc | 50 A | |
| 1+1 | 1100 Vdc | 12 A | DM10020 |
| | 1000 Vdc | 20 A | |
| | 750 Vdc | 32 A | |
| | 700 Vdc | 40 A | |
| | 500 Vdc | 50 A | |
| 1+1 | 1500 Vdc | 10 A | DX12030 |
| | 1250 Vdc | 20 A | |
| | 1000 Vdc | 30 A | |
| | 800 Vdc | 45 A | |
| 1+1 | 1500 Vdc | 15 A | DX12030..U |
| | 1250 Vdc | 25 A | |
| | 110 Vdc | 30 A | |
| | 1000 Vdc | 40 A | |
| | 800 Vdc | 50 A | |
| 1+1 | 1500 Vdc | 20 A | DX15030..U |
| | 1300 Vdc | 25 A | |
| | 1250 Vdc | 30 A | |
| | 1000 Vdc | 50 A | |
| 1+1 | 1500 Vdc | 30 A | DX15030..P* |
| | 1000 Vdc | 60 A | |

* No TUV approved

PV1 RATED

# DU Series - Product range for American market

| Poles | Description | | Series |
|---|---|---|---|
| 1+1 | 600 Vdc | 20 A | DU06020 |
| 1+1 | 1000 Vdc | 20 A | DU10020 |
| | 600 Vdc | 40 A | |
| 1+1 | 1500 Vdc | 20 A | DU15020 |
| | 1000 Vdc | 40 A | |
| | 800 Vdc | 50 A | |
| 2+1 | 1500 Vdc | 30 A | DU15030 |
| | 1000 Vdc | 50 A | |

## Technical data IEC EN 60947-3

| | | | | DP10012 | | DK10016 | | DM10020 | | DX12030 | |
|---|---|---|---|---|---|---|---|---|---|---|---|
| **Technical data IEC EN 60947-3** | **Rated insulation voltage** | Ui | V | 1500 | | | | | | | |
| | **Rated impulse withstand voltage** | Uimp | kV | 8 | | | | | | | |
| | **Rated thermal current** | Ith | A | 50 | | | | | | | |
| | **Power loss per layer at 20 A / 50 A** | | W | 0,2 / 1,25 | | | | | | | |
| | **DC inputs** | | | | | | | | | | |
| | **Utilization category** | | | PV1 | PV2 | PV1 | PV2 | PV1 | PV2 | PV1 | PV2 |
| | **Rated operational current at 1500 V** | Ie | A | - | - | - | - | - | - | 10 | 5 |
| | **Rated operational current at 1300 V** | Ie | A | - | - | - | - | - | - | - | - |
| | **Rated operational current at 1250 V** | Ie | A | - | - | - | - | - | - | 20 | 8 |
| | **Rated operational current at 1200 V** | Ie | A | - | - | 8 | - | - | - | - | - |
| | **Rated operational current at 1100 V** | Ie | A | - | - | - | - | 12 | 5 | - | - |
| | **Rated operational current at 1000 V** | Ie | A | 12 | 4 | 16 | 6 | 20 | 10 | 30 | 12 |
| | **Rated operational current at 800 V** | Ie | A | - | - | - | - | - | - | 45 | 17 |
| | **Rated operational current at 750 V** | Ie | A | 25 | 10 | 32 | 12 | 32 | 18 | - | - |
| | **Rated operational current at 700 V** | Ie | A | - | - | - | 16 | 40 | 20 | - | 25 |
| | **Rated operational current at 600 V** | Ie | A | 32 | 16 | - | - | - | - | - | - |
| | **Rated operational current at 500 V** | Ie | A | - | - | 50 | - | 50 | - | - | - |
| | **Short circuit protection** | | | | | | | | | | |
| | **Rated conditional short-circuit current** | | kA | 5 | | | | | | | |
| | **Max fuse size for short circuit protection** | gPV | A | 50 | | | | | | | |
| | **Rated short-time withstand current (1 s)** | Icw | A | 780 | | | | | | | |
| | **Rated short-circuit making capacity** | Icm | kA | 1,4 | | | | | | | |
| | **AC inputs** | | | | | | | | | | |
| | **Utilization category** | | | - | | AC-21B | | - | | - | |
| | **Rated insulation voltage** | Ui | V | - | | 690 | | - | | - | |
| | **Rated impulse withstand voltage** | Uimp | kV | - | | 8 | | - | | - | |
| | **Rated thermal current** | Ith | A | - | | 63 | | - | | - | |
| | **Rated operational current** | Ie | 690 V | - | | 63 | | - | | - | |
| **Technical data UL 508i** | **DC inputs** | | | | | | | | | | |
| | **Rated operational current at 1500 V** | Ie | A | - | - | - | - | - | - | - | - |
| | **Rated operational current at 1000 V** | Ie | A | - | - | - | - | - | - | - | - |
| | **Rated operational current at 800 V** | Ie | A | - | - | - | - | - | - | - | - |
| | **Rated operational current at 600 V** | Ie | A | - | - | - | - | - | - | - | - |
| | **Short circuit protection** | | | | | | | | | | |
| | **Rated conditional short-circuit current** | | kA | - | - | - | - | - | - | - | - |
| | **Max fuse size for short circuit protection** | gPV | A | - | - | - | - | - | - | - | - |

| | | | | |
|---|---|---|---|---|
| **Mechanical characteristics** | **Terminals** | | | |
| | **Cross-section of flexible/solid wires** | Max. | $mm^2$ | 2x 6 |
| | | | AWG | 2x 10 |
| | **Cross-section of wires with fork lug** | Max. | $mm^2$ | 1x 16 |
| | | | AWG | 1x 6 |
| | **Screw type** | | | M4 - PH2 |
| | **Screw tightening torque** | Nm | | 1,7 ±10% |
| | | lb·in | | 12 ±10% |
| | **Protection degree IEC 529 EN 60529** | | | |
| | **To the terminals** | | | IP20 |
| | **Ambient conditions** | | | |
| | **Pollution degree** | | | 2 |
| | **Operational ambient temperature** | | °C | -40 ÷ +85 |
| | **Storage ambient temperature** | | °C | -40 ÷ +85 |
| | **Damp heat test IEC60068-2-30** | | | 90-100% RH at +55 °C |

| DX12030..U | | DX15030..U | | DX15030..P* | |
|---|---|---|---|---|---|
| 1500 | | | | | |
| 8 | | | | | |
| 50 | | 50 | | 60 | |
| 0,2 / 1,25 | | | | | |
| | | | | | |
| PV1 | PV2 | PV1 | PV2 | PV1 | PV2 |
| 15 | 6 | 20 | 8 | 30 | 12 |
| - | - | 25 | 10 | - | - |
| 25 | 10 | 30 | 12 | - | - |
| - | - | - | - | - | - |
| 30 | 12 | - | - | - | - |
| 40 | 16 | 50 | 20 | 60 | 25 |
| 50 | 20 | - | 30 | - | - |
| - | - | - | - | - | - |
| - | 30 | - | 40 | - | - |
| - | - | - | - | - | - |
| - | - | - | - | - | - |
| | | | | | |
| 5 | | | | | |
| 50 | | 50 | | 63 | |
| 780 | | | | | |
| 1,4 | | | | | |
| | | | | | |
| - | | - | | - | |
| - | | - | | - | |
| - | | - | | - | |
| - | | - | | - | |
| - | | - | | - | |
| | | | | | |
| - | - | - | - | - | - |
| - | - | - | - | - | - |
| - | - | - | - | - | - |
| - | - | - | - | - | - |
| | | | | | |
| - | - | - | - | - | - |
| - | - | - | - | - | - |
| | | | | | |
| 2x 6 | | | | | |
| 2x 10 | | | | | |
| 1x 16 | | | | | |
| 1x 6 | | | | | |
| M4 - PH2 | | | | | |
| 1,7 ±10% | | | | | |
| 12 ±10% | | | | | |
| | | | | | |
| IP20 | | | | | |
| | | | | | |
| 2 | | | | | |
| -40 ÷ +85 | | | | | |
| -40 ÷ +85 | | | | | |
| 90-100% RH at +55 °C | | | | | |

* No TUV approved

| DU06020 | DU10020 | DU15020 | DU15030 |
|---|---|---|---|
| 1500 | | | |
| 8 | | | |
| 50 | | | |
| 0,2 / 1,25 | | | |
| | | | |
| - | - | - | - |
| - | - | - | - |
| - | - | - | - |
| - | - | - | - |
| - | - | - | - |
| - | - | - | - |
| - | - | - | - |
| - | - | - | - |
| - | - | - | - |
| - | - | - | - |
| - | - | - | - |
| - | - | - | - |
| | | | |
| - | - | - | - |
| - | - | - | - |
| - | - | - | - |
| - | - | - | - |
| - | - | - | - |
| - | - | - | - |
| | | | |
| - | - | 20 | 30 |
| - | 20 | 40 | 50 |
| - | - | 50 | - |
| 20 | 40 | - | - |
| | | | |
| 5 | | | |
| 50 | | | 63 |
| Suitable for use on a circuit capable of delivery not more than 5.000 rms symmetrical Amperes, 1500 Vdc max, when protected by fuses | | | |
| | | | |
| 2x 6 | | | |
| 2x 10 | | | |
| 1x 16 | | | |
| 1x 6 | | | |
| M4 - PH2 | | | |
| 1,7 ±10% | | | |
| 12 ±10% | | | |
| | | | |
| IP20 | | | |
| | | | |
| 3 | | | |
| -40 ÷ +70 | | | |
| -40 ÷ +85 | | | |
| 90-100% RH at +55 °C | | | |

# Applications

| Inverter | String combiner boxes | Energy storage systems (ESS) | PV Plant |
|---|---|---|---|
| | <br> <br> | | |

# Protection degree

The highest level of waterproof and dustproof in photovoltaic industry certified by TÜV and UL. IP66 / NEMA 4X as a standard, IP67 is optional. Please contact us for more information.

## IP66 - Water resistant against powerful jets

To pass IP66 testing, the fixture must be able to protect against powerful water jets. Water projected in powerful jets (12.5 mm nozzle) against the enclosure from any direction shall have no harmful effects.
**Test duration:** at least 3 minutes.
**Water volume:** 100 litres per minute.
**Pressure:** 100 kPa at distance of 3 m.

## NEMA 4X - Water resistant against water sprayed from a hose

The NEMA rating is an American standard that outlines the protection level against environmental conditions. The NEMA 4X level, much like the IP66, provides excellent protection against dust and water, and also offers corrosion resistance.

### This protection is required for the main PV installation

## IP67 - Protected against complete temporary water submersion

To pass IP67 testing, ingress of water in harmful quantity shall not be possible when the enclosure is immersed in water under defined conditions of pressure and time (up to 1 m of submersion).
**Test duration:** 30 minutes.
Immersion at depth of at least 1 m measured at bottom of device, and at least 15 cm measured at top of device.

### This protection is required for floating PV installation

# Fixing type

## Panel mounting

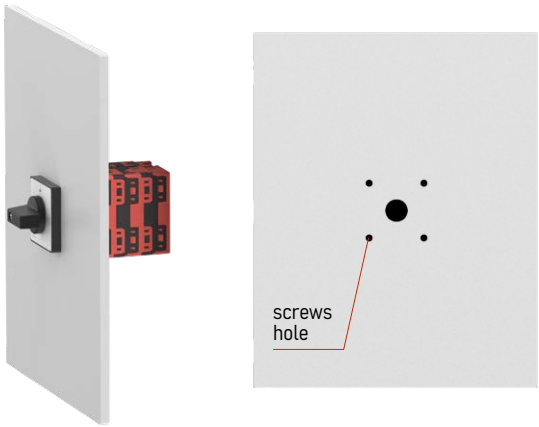


### Fixing by 4 screws

36x36 mm hole interaxis
48x48 mm hole interaxis

**Main features**
No bending of the switch

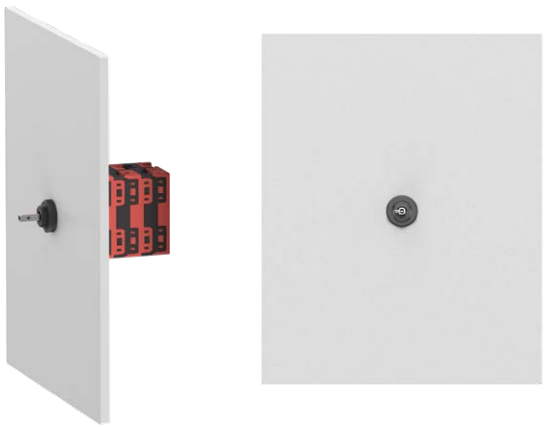

### Fixing by M16 hole

Fixing with nut by M16 x 1,5 mm single hole

**Main features**
Reduced assembly time

## Base mounting

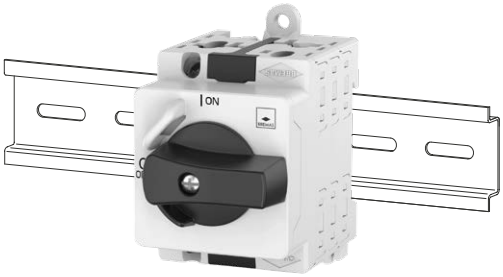


### Fixing on DIN rail

Mechanical fixing on DIN rail

**Main features**
Assembly tools not required

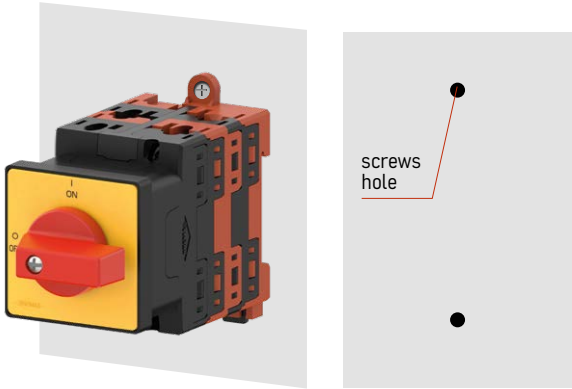


### Fixing by 2 screws

68 mm hole interaxis

**Main features**
DIN rail not needed

# Mounting type

**Terminal screws orientation**

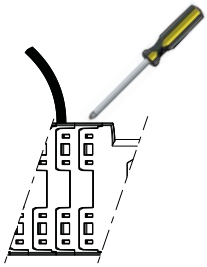

**Base mounting**

**Head up**

| Product image | Description | Mounting type |
|---|---|---|
| | Back-side for DIN rail or 2 screws fixing<br>For direct operation<br>With pre-mounted knob and/or plate | E |
| | Back-side for DIN rail or 2 screw fixing<br>For standard distribution boards (45 mm window)<br>With pre-mounted knob | D |

**Panel mounting**

| Product image | Description | Mounting type |
|---|---|---|
| | Fixing M16 x 1,5 mm (L = 12 mm) | L |
| | Fixing 36x36 mm with 4 tapping screws | T |
| | Fixing 48x48 mm with 4 tapping screws | C |

**Double mounting**

| Product image | Description | Mounting type |
|---|---|---|
| | Back-side for DIN rail or 2 screws fixing<br>Fixing M16 (L = 12 mm) | V |
| | Back-side for DIN rail or 2 screws fixing<br>Fixing 36x36 mm with 4 tapping screws | W |
| | Back-side for DIN rail or 2 screws fixing<br>Fixing 48x48 mm with 4 tapping screws | J |

We are available for additional custom configurations. Feel free to reach out to discuss your specific needs.

# Configuration

## Handle position

Available for base mounting, panel mounting or double mounting

**A** = 9 (OFF) and 12 o'clock (ON)
**B** = 12 (OFF) and 3 o'clock (ON)
**C** = 3 (OFF) and 6 o'clock (ON)
**D** = 6 (OFF) and 9 o'clock (ON)
**Q** = 12 (OFF) and 3 o'clock (ON); 6 (OFF) and 9 o'clock (ON)

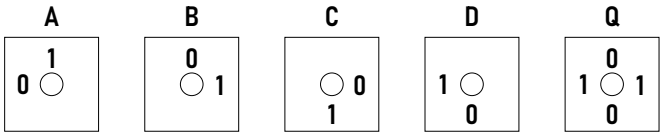


## N° of inputs and poles configuration

### N° of inputs
A single switch can manage up to 6 inputs/MPPT for DP-DK-DM-DX series, and up to 4 inputs/MPPT for DU series, with two poles each one (negative and positive polarity).

### Poles configuration
It is possible to realize different poles configurations.
The standard configuration supplied is "Poles 1+1".

Poles 1+1

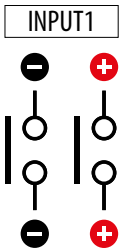


We are available for additional custom configurations. Feel free to reach out to discuss your specific needs.

# Handles and plates

## DP-DM-DK-DX Series

| Panel mounting – Fixing by 4 screws – IP66 handles | | | |
|---|---|---|---|
| | RV4 | RW4 | RV6 |
| | RW6 | RKU6S | RL6S |

| Panel mounting / Double mounting – Fixing with nut by M16 x 1,5 mm single hole | | | | | | | |
|---|---|---|---|---|---|---|---|
| | Screw fixing | | Snap on fixing | | | | |
| | 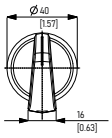 MVU5 | 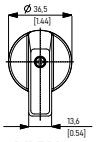 MVU6 | 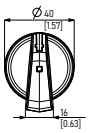 MSU5 | ML6 | MKU6 | ML5 | MKU5 |

## DU Series

| Panel mounting - Fixing by 4 screws - NEMA 4X handles | | |
|---|---|---|
| | RV4UL | RW4UL |
| | RV6UL | RW6UL |

| Panel mounting / Double mounting – Fixing with nut by M16 x 1,5 mm single hole | | | | |
|---|---|---|---|---|
| | MKU5 | MLU5 | MKU6 | MLU6 |
| | | | | |

# International approvals

| | International | USA | China* | Australia |
|---|---|---|---|---|
| Series | | | | |
| DP10012 | ● | | ● | |
| DK10016 | ● | | ● | |
| DM10020 | ● | | ● | |
| DX12030 | ● | | ● | ● |
| DX12030..U | ● | | ● | ● |
| DX15030..U | ● | | ● | ● |
| DX15030..P | | | ● | |
| DU06020 | | ● | | |
| DU10020 | | ● | | |
| DU15020 | | ● | | |
| DU15030 | | ● | | |

*On request

# DP-DK-DM-DX Series

## For standard distribution boards (45mm window)

N° of poles 1x (1+1)

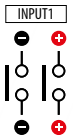


Base mounting

Pre-mounted knob

Fixing on DIN rail or by 2 screws

| Series | PV1 cat. per input | PV1 cat. per input | Code | N° of layers |
|---|---|---|---|---|
| DP | 600 V - 32 A | 1000 V - 12 A | DP100121E0ADRND | 3* |
| DK | 750 V - 32 A | 1000 V - 16 A | DK100161E0ADRND | 3* |
| DM | 700 V - 40 A | 1000 V - 20 A | DM100201E0ADRND | 3* |
| DX | 1000 V - 30 A | 1500 V - 10 A | DX120301E0ADRND | 3* |
| DX..U | 1000 V - 40 A | 1500 V - 15 A | DX120301EUADRND | 3* |
| | 1000 V - 50 A | 1500 V - 20 A | DX150301EUADRND | 3* |
| DX..P | 1000 V - 60 A | 1500 V - 30 A | DX150301EPADRND | 3* |

* One layer is empty

N° of poles 1x (1+1)

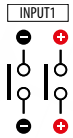


Base mounting

Pre-mounted knob - Padlockable

Fixing on DIN rail or by 2 screws

| Series | PV1 cat. per input | PV1 cat. per input | Code | N° of layers |
|---|---|---|---|---|
| DP | 600 V - 32 A | 1000 V - 12 A | DP100121E0ADRLE | 3* |
| DK | 750 V - 32 A | 1000 V - 16 A | DK100161E0ADRLE | 3* |
| DM | 700 V - 40 A | 1000 V - 20 A | DM100201E0ADRLE | 3* |
| DX | 1000 V - 30 A | 1500 V - 10 A | DX120301E0ADRLE | 3* |
| DX..U | 1000 V - 40 A | 1500 V - 15 A | DX120301EUADRLE | 3* |
| | 1000 V - 50 A | 1500 V - 20 A | DX150301EUADRLE | 3* |
| DX..P | 1000 V - 60 A | 1500 V - 30 A | DX150301EPADRLE | 3* |

* One layer is empty

## Example of applications

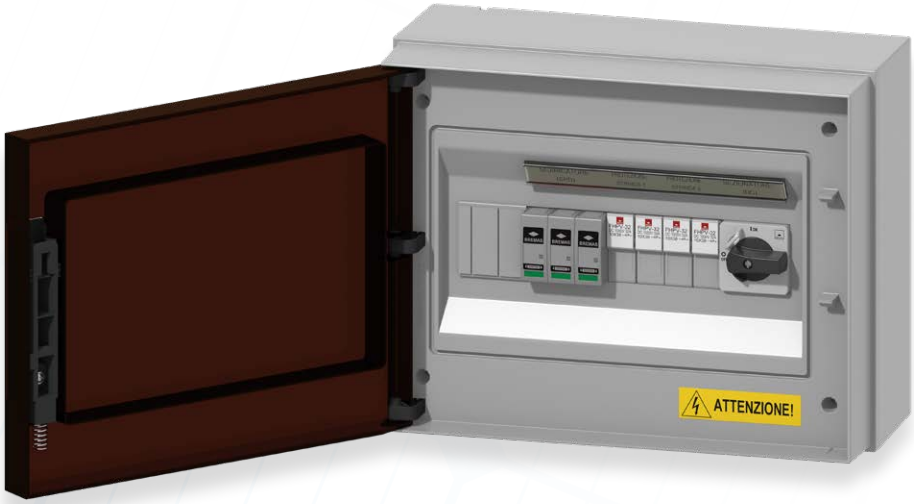

# DP-DK-DM-DX Series - For direct operation

N° of poles 1x (1+1)

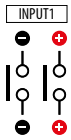


Base mounting - Pre-mounted knob

Fixing on DIN rail or by 2 screws

| Series | PV1 cat. per input | PV1 cat. per input | Code | N° of layers |
|---|---|---|---|---|
| DP | 600 V - 32 A | 1000 V - 12 A | DP10012120AERW4E | 2 |
| DK | 750 V - 32 A | 1000 V - 16 A | DK10016120AERW4E | 2 |
| DM | 700 V - 40 A | 1000 V - 20 A | DM10020120AERW4E | 2 |
| DX | 1000 V - 30 A | 1500 V - 10 A | DX120301E0AERW4E | 3* |
| DX..U | 1000 V - 40 A | 1500 V - 15 A | DX120301EUAERW4E | 3* |
| | 1000 V - 50 A | 1500 V - 20 A | DX150301EUAERW4E | 3* |
| DX..P | 1000 V - 60 A | 1500 V - 30 A | DX150301EPAERW4E | 3* |

* One layer is empty

N° of poles 2x (1+1)

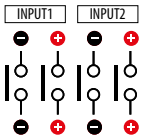


Base mounting - Pre-mounted knob

Fixing on DIN rail or by 2 screws

| Series | PV1 cat. per input | PV1 cat. per input | Code | N° of layers |
|---|---|---|---|---|
| DP | 600 V - 32 A | 1000 V - 12 A | DP10012220AERW4E | 4 |
| DK | 750 V - 32 A | 1000 V - 16 A | DK10016220AERW4E | 4 |
| DM | 700 V - 40 A | 1000 V - 20 A | DM10020220AERW4E | 4 |
| DX | 1000 V - 30 A | 1500 V - 10 A | DX120302E0AERW4E | 5* |
| DX..U | 1000 V - 40 A | 1500 V - 15 A | DX120302EUAERW4E | 5* |
| | 1000 V - 50 A | 1500 V - 20 A | DX150302EUAERW4E | 5* |
| DX..P | 1000 V - 60 A | 1500 V - 30 A | DX150302EPAERW4E | 5* |

* One layer is empty

N° of poles 3x (1+1)

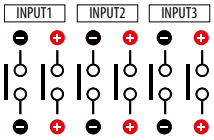


Base mounting - Pre-mounted knob

Fixing on DIN rail or by 2 screws

| Series | PV1 cat. per input | PV1 cat. per input | Code | N° of layers |
|---|---|---|---|---|
| DP | 600 V - 32 A | 1000 V - 12 A | DP10012320AERW4E | 6 |
| DK | 750 V - 32 A | 1000 V - 16 A | DK10016320AERW4E | 6 |
| DM | 700 V - 40 A | 1000 V - 20 A | DM10020320AERW4E | 6 |
| DX | 1000 V - 30 A | 1500 V - 10 A | DX120303E0AERW4E | 7* |
| DX..U | 1000 V - 40 A | 1500 V - 15 A | DX120303EUAERW4E | 7* |
| | 1000 V - 50 A | 1500 V - 20 A | DX150303EUAERW4E | 7* |
| DX..P | 1000 V - 60 A | 1500 V - 30 A | DX150303EPAERW4E | 7* |

* One layer is empty

We are available for additional custom configurations. Feel free to reach out to discuss your specific needs.

# DU Series - For direct operation

N° of poles 1x (1+1)

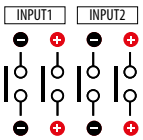


Base mounting - Pre-mounted knob

Fixing on DIN rail or by 2 screws

| Series | UL per input | UL per input | Code | N° of layers |
|---|---|---|---|---|
| **DU** | 600 V - 20 A | - | **DU06020120AERW4UL** | 2 |
| **DU** | 600 V - 40 A | 1000 V - 20 A | **DU10020120AERW4UL** | 2 |
| **DU** | 1000 V - 40 A | 1500 V - 20 A | **DU15020120AERW4UL** | 2 |
| **DU*** | 1000 V - 50 A | 1500 V - 30 A | **DU15030130AERW4UL** | 3 |

* N° of poles 2x (2+1)

N° of poles 2x (1+1)

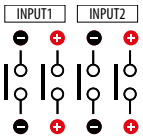


Base mounting - Pre-mounted knob

Fixing on DIN rail or by 2 screws

| Series | UL per input | UL per input | Code | N° of layers |
|---|---|---|---|---|
| **DU** | 600 V - 20 A | - | **DU06020220AERW4UL** | 4 |
| **DU** | 600 V - 40 A | 1000 V - 20 A | **DU10020220AERW4UL** | 4 |
| **DU** | 1000 V - 40 A | 1500 V - 20 A | **DU15020220AERW4UL** | 4 |
| **DU*** | 1000 V - 50 A | 1500 V - 30 A | **DU15030230AERW4UL** | 6 |

* N° of poles 2x (2+1)

N° of poles 3x (1+1)

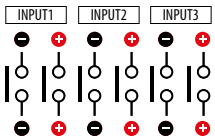


Base mounting - Pre-mounted knob

Fixing on DIN rail or by 2 screws

| Series | UL per input | UL per input | Code | N° of layers |
|---|---|---|---|---|
| **DU** | 600 V - 20 A | - | **DU06020320AERW4UL** | 6 |
| **DU** | 600 V - 40 A | 1000 V - 20 A | **DU10020320AERW4UL** | 6 |
| **DU** | 1000 V - 40 A | 1500 V - 20 A | **DU15020320AERW4UL** | 6 |
| **DU*** | 1000 V - 50 A | 1500 V - 30 A | **DU15030330AERW4UL** | 9 |

* N° of poles 3x (2+1)

We are available for additional custom configurations. Feel free to reach out to discuss your specific needs.

# DP-DK-DM-DX Series - 1 input / MPPT

N° of poles 1x (1+1)

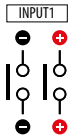


Panel mounting

4 screws 36x36 mm

Single hole M16

| Series | PV1 cat. per input | PV1 cat. per input | Code | Code | Code | N° of layers |
|---|---|---|---|---|---|---|
| DP | 600 V - 32 A | 1000 V - 12 A | DP10012120ATRV4E | DP10012120ALMVU5E | DP10012120ALMVU6E | 2 |
| DK | 750 V - 32 A | 1000 V - 16 A | DK10016120ATRV4E | DK10016120ALMVU5E | DK10016120ALMVU6E | 2 |
| DM | 700 V - 40 A | 1000 V - 20 A | DM10020120ATRV4E | DM10020120ALMVU5E | DM10020120ALMVU6E | 2 |
| DX | 1000 V - 30 A | 1500 V - 10 A | DX12030120ATRV4E | DX12030120ALMVU5E | DX12030120ALMVU6E | 2 |
| DX..U | 1000 V - 40 A | 1500 V - 15 A | DX1203012UATRV4E | DX1203012UALMVU5E | DX1203012UALMVU6E | 2 |
| | 1000 V - 50 A | 1500 V - 20 A | DX1503012UATRV4E | DX1503012UALMVU5E | DX1503012UALMVU6E | 2 |
| DX..P | 1000 V - 60 A | 1500 V - 30 A | DX1503012PATRV4E | DX1503012PALMVU5E | DX1503012PALMVU6E | 2 |

N° of poles 1x (1+1)

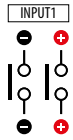


Panel mounting

4 screws 36x36 mm

Single hole M16

| Series | PV1 cat. per input | PV1 cat. per input | Code | Code | Code | N° of layers |
|---|---|---|---|---|---|---|
| DP | 600 V - 32 A | 1000 V - 12 A | DP10012120ATRKU6SE | DP10012120ALML5E | DP10012120ALMKU6E | 2 |
| DK | 750 V - 32 A | 1000 V - 16 A | DK10016120ATRKU6SE | DK10016120ALML5E | DK10016120ALMKU6E | 2 |
| DM | 700 V - 40 A | 1000 V - 20 A | DM10020120ATRKU6SE | DM10020120ALML5E | DM10020120ALMKU6E | 2 |
| DX | 1000 V - 30 A | 1500 V - 10 A | DX12030120ATRKU6SE | DX12030120ALML5E | DX12030120ALMKU6E | 2 |
| DX..U | 1000 V - 40 A | 1500 V - 15 A | DX1203012UATRKU6SE | DX1203012UALML5E | DX1203012UALMKU6E | 2 |
| | 1000 V - 50 A | 1500 V - 20 A | DX1503012UATRKU6SE | DX1503012UALML5E | DX1503012UALMKU6E | 2 |
| DX..P | 1000 V - 60 A | 1500 V - 30 A | DX1503012PATRKU6SE | DX1503012PALML5E | DX1503012PALMKU6E | 2 |

We are available for additional custom configurations. Feel free to reach out to discuss your specific needs.

# DU Series - 1 input / MPPT

| N° of poles 1x (1+1) 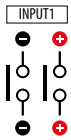 | | | Panel mounting 4 screws 36x36 mm | Single hole M16 | | |
|---|---|---|---|---|---|---|
| **Series** | **UL per input** | **UL per input** | **Code** | **Code** | **Code** | **N° of layers** |
| **DU** | 600 V - 20 A | - | **DU06020120ATRV4UL** | **DU06020120ALMKU5** | **DU06020120ALMLU5** | 2 |
| **DU** | 600 V - 40 A | 1000 V - 20 A | **DU10020120ATRV4UL** | **DU10020120ALMKU5** | **DU10020120ALMLU5** | 2 |
| **DU** | 1000 V - 40 A | 1500 V - 20 A | **DU15020120ATRV4UL** | **DU15020120ALMKU5** | **DU15020120ALMLU5** | 2 |
| **DU*** | 1000 V - 50 A | 1500 V - 30 A | **DU15030130ATRV4UL** | **DU15030130ALMKU5** | **DU15030130ALMLU5** | 3 |

* N° of poles 1x (2+1)

| N° of poles 1x (1+1) 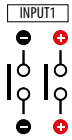 | | | Panel mounting 4 screws 36x36 mm | Single hole M16 | | |
|---|---|---|---|---|---|---|
| **Series** | **UL per input** | **UL per input** | **Code** | **Code** | **Code** | **N° of layers** |
| **DU** | 600 V - 20 A | - | **DU06020120ATRW4UL** | **DU06020120ALMKU6** | **DU06020120ALMLU6** | 2 |
| **DU** | 600 V - 40 A | 1000 V - 20 A | **DU10020120ATRW4UL** | **DU10020120ALMKU6** | **DU10020120ALMLU6** | 2 |
| **DU** | 1000 V - 40 A | 1500 V - 20 A | **DU15020120ATRW4UL** | **DU15020120ALMKU6** | **DU15020120ALMLU6** | 2 |
| **DU*** | 1000 V - 50 A | 1500 V - 30 A | **DU15030130ATRW4UL** | **DU15030130ALMKU6** | **DU15030130ALMLU6** | 3 |

* N° of poles 1x (2+1)

We are available for additional custom configurations. Feel free to reach out to discuss your specific needs.

# DP-DK-DM-DX Series - 2 inputs / MPPT

| N° of poles 2x (1+1) 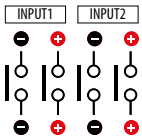 | | | Panel mounting 4 screws 36x36 mm | Single hole M16 | | |
|---|---|---|---|---|---|---|
| **Series** | **PV1 cat. per input** | **PV1 cat. per input** | **Code** | **Code** | **Code** | **N° of layers** |
| **DP** | 600 V - 32 A | 1000 V - 12 A | **DP10012220ATRV4E** | **DP10012220ALMVU5E** | **DP10012220ALMVU6E** | 4 |
| **DK** | 750 V - 32 A | 1000 V - 16 A | **DK10016220ATRV4E** | **DK10016220ALMVU5E** | **DK10016220ALMVU6E** | 4 |
| **DM** | 700 V - 40 A | 1000 V - 20 A | **DM10020220ATRV4E** | **DM10020220ALMVU5E** | **DM10020220ALMVU6E** | 4 |
| **DX** | 1000 V - 30 A | 1500 V - 10 A | **DX12030220ATRV4E** | **DX12030220ALMVU5E** | **DX12030220ALMVU6E** | 4 |
| **DX..U** | 1000 V - 40 A | 1500 V - 15 A | **DX1203022UATRV4E** | **DX1203022UALMVU5E** | **DX1203022UALMVU6E** | 4 |
| | 1000 V - 50 A | 1500 V - 20 A | **DX1503022UATRV4E** | **DX1503022UALMVU5E** | **DX1503022UALMVU6E** | 4 |
| **DX..P** | 1000 V - 60 A | 1500 V - 30 A | **DX1503022PATRV4E** | **DX1503022PALMVU5E** | **DX1503022PALMVU6E** | 4 |

| N° of poles 2x (1+1) 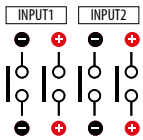 | | | Panel mounting 4 screws 36x36 mm | Single hole M16 | | |
|---|---|---|---|---|---|---|
| **Series** | **PV1 cat. per input** | **PV1 cat. per input** | **Code** | **Code** | **Code** | **N° of layers** |
| **DP** | 600 V - 32 A | 1000 V - 12 A | **DP10012220ATRKU6SE** | **DP10012220ALML5E** | **DP10012220ALMKU6E** | 4 |
| **DK** | 750 V - 32 A | 1000 V - 16 A | **DK10016220ATRKU6SE** | **DK10016220ALML5E** | **DK10016220ALMKU6E** | 4 |
| **DM** | 700 V - 40 A | 1000 V - 20 A | **DM10020220ATRKU6SE** | **DM10020220ALML5E** | **DM10020220ALMKU6E** | 4 |
| **DX** | 1000 V - 30 A | 1500 V - 10 A | **DX12030220ATRKU6SE** | **DX12030220ALML5E** | **DX12030220ALMKU6E** | 4 |
| **DX..U** | 1000 V - 40 A | 1500 V - 15 A | **DX1203022UATRKU6SE** | **DX1203022UALML5E** | **DX1203022UALMKU6E** | 4 |
| | 1000 V - 50 A | 1500 V - 20 A | **DX1503022UATRKU6SE** | **DX1503022UALML5E** | **DX1503022UALMKU6E** | 4 |
| **DX..P** | 1000 V - 60 A | 1500 V - 30 A | **DX1503022PATRKU6SE** | **DX1503022PALML5E** | **DX1503022PALMKU6E** | 4 |

We are available for additional custom configurations. Feel free to reach out to discuss your specific needs.

# DU Series - 2 inputs / MPPT

| N° of poles 2x (1+1) 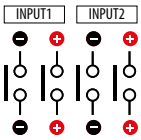  | | | Panel mounting 4 screws 36x36 mm | Single hole M16 | | |
|---|---|---|---|---|---|---|
| **Series** | **UL per input** | **UL per input** | **Code** | **Code** | **Code** | **N° of layers** |
| **DU** | 600 V - 20 A | - | **DU06020220ATRV4UL** | **DU06020220ALMKU5** | **DU06020220ALMLU5** | 4 |
| **DU** | 600 V - 40 A | 1000 V - 20 A | **DU10020220ATRV4UL** | **DU10020220ALMKU5** | **DU10020220ALMLU5** | 4 |
| **DU** | 1000 V - 40 A | 1500 V - 20 A | **DU15020220ATRV4UL** | **DU15020220ALMKU5** | **DU15020220ALMLU5** | 4 |
| **DU*** | 1000 V - 50 A | 1500 V - 30 A | **DU15030230ATRV4UL** | **DU15030230ALMKU5** | **DU15030230ALMLU5** | 6 |

* N° of poles 2x (2+1)

| N° of poles 2x (1+1) 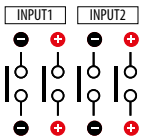  | | | Panel mounting 4 screws 36x36 mm | Single hole M16 | | |
|---|---|---|---|---|---|---|
| **Series** | **UL per input** | **UL per input** | **Code** | **Code** | **Code** | **N° of layers** |
| **DU** | 600 V - 20 A | - | **DU06020220ATRW4UL** | **DU06020220ALMKU6** | **DU06020220ALMLU6** | 4 |
| **DU** | 600 V - 40 A | 1000 V - 20 A | **DU10020220ATRW4UL** | **DU10020220ALMKU6** | **DU10020220ALMLU6** | 4 |
| **DU** | 1000 V - 40 A | 1500 V - 20 A | **DU15020220ATRW4UL** | **DU15020220ALMKU6** | **DU15020220ALMLU6** | 4 |
| **DU*** | 1000 V - 50 A | 1500 V - 30 A | **DU15030230ATRW4UL** | **DU15030230ALMKU6** | **DU15030230ALMLU6** | 6 |

* N° of poles 2x (2+1)

We are available for additional custom configurations. Feel free to reach out to discuss your specific needs.

# DP-DK-DM-DX Series - 3 inputs / MPPT

N° of poles 3x (1+1)

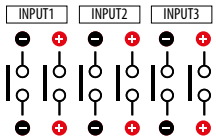


Panel mounting

4 screws 36x36 mm

Single hole M16

| Series | PV1 cat. per input | PV1 cat. per input | Code | Code | Code | N° of layers |
|---|---|---|---|---|---|---|
| DP | 600 V - 32 A | 1000 V - 12 A | DP10012320ATRV4E | DP10012320ALMVU5E | DP10012320ALMVU6E | 6 |
| DK | 750 V - 32 A | 1000 V - 16 A | DK10016320ATRV4E | DK10016320ALMVU5E | DK10016320ALMVU6E | 6 |
| DM | 700 V - 40 A | 1000 V - 20 A | DM10020320ATRV4E | DM10020320ALMVU5E | DM10020320ALMVU6E | 6 |
| DX | 1000 V - 30 A | 1500 V - 10 A | DX12030320ATRV4E | DX12030320ALMVU5E | DX12030320ALMVU6E | 6 |
| DX..U | 1000 V - 40 A | 1500 V - 15 A | DX1203032UATRV4E | DX1203032UALMVU5E | DX1203032UALMVU6E | 6 |
| | 1000 V - 50 A | 1500 V - 20 A | DX1503032UATRV4E | DX1503032UALMVU5E | DX1503032UALMVU6E | 6 |
| DX..P | 1000 V - 60 A | 1500 V - 30 A | DX1503032PATRV4E | DX1503032PALMVU5E | DX1503032PALMVU6E | 6 |

N° of poles 3x (1+1)

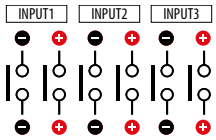


Panel mounting

4 screws 36x36 mm

Single hole M16

| Series | PV1 cat. per input | PV1 cat. per input | Code | Code | Code | N° of layers |
|---|---|---|---|---|---|---|
| DP | 600 V - 32 A | 1000 V - 12 A | DP10012320ATRKU6SE | DP10012320ALML5E | DP10012320ALMKU6E | 6 |
| DK | 750 V - 32 A | 1000 V - 16 A | DK10016320ATRKU6SE | DK10016320ALML5E | DK10016320ALMKU6E | 6 |
| DM | 700 V - 40 A | 1000 V - 20 A | DM10020320ATRKU6SE | DM10020320ALML5E | DM10020320ALMKU6E | 6 |
| DX | 1000 V - 30 A | 1500 V - 10 A | DX12030320ATRKU6SE | DX12030320ALML5E | DX12030320ALMKU6E | 6 |
| DX..U | 1000 V - 40 A | 1500 V - 15 A | DX1203032UATRKU6SE | DX1203032UALML5E | DX1203032UALMKU6E | 6 |
| | 1000 V - 50 A | 1500 V - 20 A | DX1503032UATRKU6SE | DX1503032UALML5E | DX1503032UALMKUE | 6 |
| DX..P | 1000 V - 60 A | 1500 V - 30 A | DX1503032PATRKU6SE | DX1503032PALML5E | DX1503032PALMKUE | 6 |

We are available for additional custom configurations. Feel free to reach out to discuss your specific needs.

# DU Series - 3 inputs / MPPT

| N° of poles 3x (1+1) 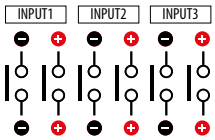 | | | Panel mounting 4 screws 36x36 mm | | Single hole M16 | |
|---|---|---|---|---|---|---|
| **Series** | **UL per input** | **UL per input** | **Code** | **Code** | **Code** | **N° of layers** |
| **DU** | 600 V - 20 A | - | **DU06020320ATRV4UL** | **DU06020320ALMKU5** | **DU06020320ALMLU5** | 6 |
| **DU** | 600 V - 40 A | 1000 V - 20 A | **DU10020320ATRV4UL** | **DU10020320ALMKU5** | **DU10020320ALMLU5** | 6 |
| **DU** | 1000 V - 40 A | 1500 V - 20 A | **DU15020320ATRV4UL** | **DU15020320ALMKU5** | **DU15020320ALMLU5** | 6 |
| **DU*** | 1000 V - 50 A | 1500 V - 30 A | **DU15030330ATRV4UL** | **DU15030330ALMKU5** | **DU15030330ALMLU5** | 9 |

* N° of poles 3x (2+1)

| N° of poles 3x (1+1) 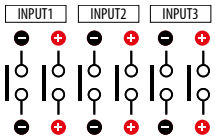 | | | Panel mounting 4 screws 36x36 mm | | Single hole M16 | |
|---|---|---|---|---|---|---|
| **Series** | **UL per input** | **UL per input** | **Code** | **Code** | **Code** | **N° of layers** |
| **DU** | 600 V - 20 A | - | **DU06020320ATRW4UL** | **DU06020320ALMKU6** | **DU06020320ALMLU6** | 6 |
| **DU** | 600 V - 40 A | 1000 V - 20 A | **DU10020320ATRW4UL** | **DU10020320ALMKU6** | **DU10020320ALMLU6** | 6 |
| **DU** | 1000 V - 40 A | 1500 V - 20 A | **DU15020320ATRW4UL** | **DU15020320ALMKU6** | **DU15020320ALMLU6** | 6 |
| **DU*** | 1000 V - 50 A | 1500 V - 30 A | **DU15030330ATRW4UL** | **DU15030330ALMKU6** | **DU15030330ALMLU6** | 9 |

* N° of poles 3x (2+1)

We are available for additional custom configurations. Feel free to reach out to discuss your specific needs.

# DP-DK-DM-DX Series - 4 inputs / MPPT

N° of poles 4x (1+1)

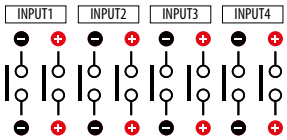


Panel mounting

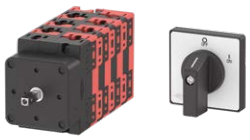

4 screws 36x36 mm

Double mounting

Single hole M16

| Series | PV1 cat. per input | PV1 cat. per input | Code | Code | Code | N° of layers |
|---|---|---|---|---|---|---|
| DP | 600 V - 32 A | 1000 V - 12 A | DP10012420ATRV4E | DP10012420AVMVU5E | DP10012420AVMVU6E | 8 |
| DK | 750 V - 32 A | 1000 V - 16 A | DK10016420ATRV4E | DK10016420AVMVU5E | DK10016420AVMVU6E | 8 |
| DM | 700 V - 40 A | 1000 V - 20 A | DM10020420ATRV4E | DM10020420AVMVU5E | DM10020420AVMVU6E | 8 |
| DX | 1000 V - 30 A | 1500 V - 10 A | DX12030420ATRV4E | DX12030420AVMVU5E | DX12030420AVMVU6E | 8 |
| DX..U | 1000 V - 40 A | 1500 V - 15 A | DX1203042UATRV4E | DX1203042UAVMVU5E | DX1203042UAVMVU6E | 8 |
| | 1000 V - 50 A | 1500 V - 20 A | DX1503042UATRV4E | DX1503042UAVMVU5E | DX1503042UAVMVU6E | 8 |
| DX..P | 1000 V - 60 A | 1500 V - 30 A | DX1503042PATRV4E | DX1503042PAVMVU5E | DX1503042PAVMVU6E | 8 |

N° of poles 4x (1+1)

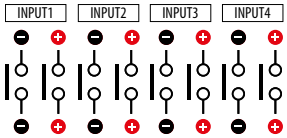


Panel mounting

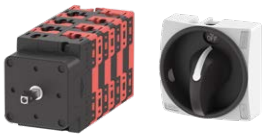

4 screws 36x36 mm

Double mounting

Single hole M16

| Series | PV1 cat. per input | PV1 cat. per input | Code | Code | Code | N° of layers |
|---|---|---|---|---|---|---|
| DP | 600 V - 32 A | 1000 V - 12 A | DP10012420ATRKU6SE | DP10012420AVML5E | DP10012420AVMKU6E | 8 |
| DK | 750 V - 32 A | 1000 V - 16 A | DK10016420ATRKU6SE | DK10016420AVML5E | DK10016420AVMKU6E | 8 |
| DM | 700 V - 40 A | 1000 V - 20 A | DM10020420ATRKU6SE | DM10020420AVML5E | DM10020420AVMKU6E | 8 |
| DX | 1000 V - 30 A | 1500 V - 10 A | DX12030420ATRKU6SE | DX12030420AVML5E | DX12030420AVMKU6E | 8 |
| DX..U | 1000 V - 40 A | 1500 V - 15 A | DX1203042UATRKU6SE | DX1203042UAVML5E | DX1203042UAVMKU6E | 8 |
| | 1000 V - 50 A | 1500 V - 20 A | DX1503042UATRKU6SE | DX1503042UAVML5E | DX1503042UAVMKU6E | 8 |
| DX..P | 1000 V - 60 A | 1500 V - 30 A | DX1503042PATRKU6SE | DX1503042PAVML5E | DX1503042PAVMKU6E | 8 |

We are available for additional custom configurations. Feel free to reach out to discuss your specific needs.

# DU Series - 4 inputs / MPPT

| N° of poles 4x (1+1) 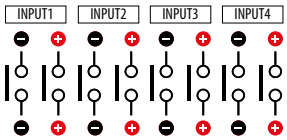  | | | Panel mounting 4 screws 36x36 mm | Double mounting Single hole M16 | | |
|---|---|---|---|---|---|---|
| **Series** | **UL per input** | **UL per input** | **Code** | **Code** | **Code** | **N° of layers** |
| **DU** | 600 V - 20 A | - | **DU06020420ATRV4UL** | **DU06020420AVMKU5** | **DU06020420AVMLU5** | 8 |
| **DU** | 600 V - 40 A | 1000 V - 20 A | **DU10020420ATRV4UL** | **DU10020420AVMKU5** | **DU10020420AVMLU5** | 8 |
| **DU** | 1000 V - 40 A | 1500 V - 20 A | **DU15020420ATRV4UL** | **DU15020420AVMKU5** | **DU15020420AVMLU5** | 8 |

| N° of poles 4x (1+1) 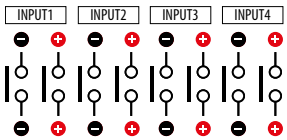  | | | Panel mounting 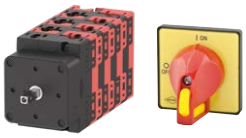 4 screws 36x36 mm | Double mounting Single hole M16 | | |
|---|---|---|---|---|---|---|
| **Series** | **UL per input** | **UL per input** | **Code** | **Code** | **Code** | **N° of layers** |
| **DU** | 600 V - 20 A | - | **DU06020420ATRW4UL** | **DU06020420AVMKU6** | **DU06020420AVMLU6** | 8 |
| **DU** | 600 V - 40 A | 1000 V - 20 A | **DU10020420ATRW4UL** | **DU10020420AVMKU6** | **DU10020420AVMLU6** | 8 |
| **DU** | 1000 V - 40 A | 1500 V - 20 A | **DU15020420ATRW4UL** | **DU15020420AVMKU6** | **DU15020420AVMLU6** | 8 |

We are available for additional custom configurations. Feel free to reach out to discuss your specific needs.

# DP-DK-DM-DX Series - 5 inputs / MPPT

N° of poles 5x (1+1)

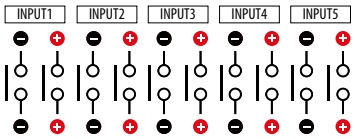


Panel mounting

4 screws 36x36 mm

Double mounting

Single hole M16

| Series | PV1 cat. per input | PV1 cat. per input | Code | Code | Code | N° of layers |
|---|---|---|---|---|---|---|
| DP | 600 V - 32 A | 1000 V - 12 A | DP10012520ATRV4E | DP10012520AVMVU5E | DP10012520AVMVU6E | 10 |
| DK | 750 V - 32 A | 1000 V - 16 A | DK10016520ATRV4E | DK10016520AVMVU5E | DK10016520AVMVU6E | 10 |
| DM | 700 V - 40 A | 1000 V - 20 A | DM10020520ATRV4E | DM10020520AVMVU5E | DM10020520AVMVU6E | 10 |
| DX | 1000 V - 30 A | 1500 V - 10 A | DX12030520ATRV4E | DX12030520AVMVU5E | DX12030520AVMVU6E | 10 |
| DX..U | 1000 V - 40 A | 1500 V - 15 A | DX1203052UATRV4E | DX1203052UAVMVU5E | DX1203052UAVMVU6E | 10 |
| | 1000 V - 50 A | 1500 V - 20 A | DX1503052UATRV4E | DX1503052UAVMVU5E | DX1503052UAVMVU6E | 10 |
| DX..P | 1000 V - 60 A | 1500 V - 30 A | DX1503052PATRV4E | DX1503052PAVMVU5E | DX1503052PAVMVU6E | 10 |

N° of poles 5x (1+1)

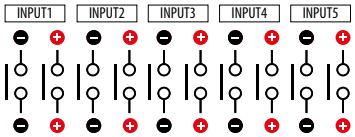


Panel mounting

4 screws 36x36 mm

Double mounting

Single hole M16

| Series | PV1 cat. per input | PV1 cat. per input | Code | Code | Code | N° of layers |
|---|---|---|---|---|---|---|
| DP | 600 V - 32 A | 1000 V - 12 A | DP10012520ATRKU6SE | DP10012520AVML5E | DP10012520AVMKU6E | 10 |
| DK | 750 V - 32 A | 1000 V - 16 A | DK10016520ATRKU6SE | DK10016520AVML5E | DK10016520AVMKU6E | 10 |
| DM | 700 V - 40 A | 1000 V - 20 A | DM10020520ATRKU6SE | DM10020520AVML5E | DM10020520AVMKU6E | 10 |
| DX | 1000 V - 30 A | 1500 V - 10 A | DX12030520ATRKU6SE | DX12030520AVML5E | DX12030520AVMKU6E | 10 |
| DX..U | 1000 V - 40 A | 1500 V - 15 A | DX1203052UATRKU6SE | DX1203052UAVML5E | DX1203052UAVMKU6E | 10 |
| | 1000 V - 50 A | 1500 V - 20 A | DX1503052UATRKU6SE | DX1503052UAVML5E | DX1503052UAVMKU6E | 10 |
| DX..P | 1000 V - 60 A | 1500 V - 30 A | DX1503052PATRKU6SE | DX1503052PAVML5E | DX1503052PAVMKU6E | 10 |

We are available for additional custom configurations. Feel free to reach out to discuss your specific needs.

# DP-DK-DM-DX Series - 6 inputs / MPPT

N° of poles 6x (1+1)

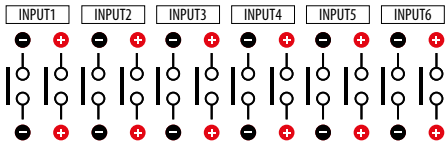


Panel mounting

4 screws 36x36 mm

Double mounting

Single hole M16

| Series | PV1 cat. per input | PV1 cat. per input | Code | Code | Code | N° of layers |
|---|---|---|---|---|---|---|
| DP | 600 V - 32 A | 1000 V - 12 A | DP10012620ATRV4E | DP10012620AVMVU5E | DP10012620AVMVU6E | 12 |
| DK | 750 V - 32 A | 1000 V - 16 A | DK10016620ATRV4E | DK10016620AVMVU5E | DK10016620AVMVU6E | 12 |
| DM | 700 V - 40 A | 1000 V - 20 A | DM10020620ATRV4E | DM10020620AVMVU5E | DM10020620AVMVU6E | 12 |
| DX | 1000 V - 30 A | 1500 V - 10 A | DX12030620ATRV4E | DX12030620AVMVU5E | DX12030620AVMVU6E | 12 |
| DX..U | 1000 V - 40 A | 1500 V - 15 A | DX1203062UATRV4E | DX1203062UAVMVU5E | DX1203062UAVMVU6E | 12 |
| | 1000 V - 50 A | 1500 V - 20 A | DX1503062UATRV4E | DX1503062UAVMVU5E | DX1503062UAVMVU6E | 12 |
| DX..P | 1000 V - 60 A | 1500 V - 30 A | DX1503062PATRV4E | DX1503062PAVMVU5E | DX1503062PAVMVU6E | 12 |

N° of poles 6x (1+1)

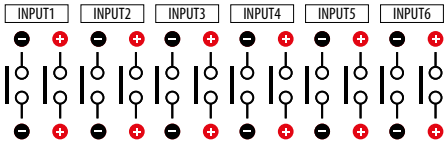


Panel mounting

4 screws 36x36 mm

Double mounting

Single hole M16

| Series | PV1 cat. per input | PV1 cat. per input | Code | Code | Code | N° of layers |
|---|---|---|---|---|---|---|
| DP | 600 V - 32 A | 1000 V - 12 A | DP10012620ATRKU6SE | DP10012620AVML5E | DP10012620AVMKU6E | 12 |
| DK | 750 V - 32 A | 1000 V - 16 A | DK10016620ATRKU6SE | DK10016620AVML5E | DK10016620AVMKU6E | 12 |
| DM | 700 V - 40 A | 1000 V - 20 A | DM10020620ATRKU6SE | DM10020620AVML5E | DM10020620AVMKU6E | 12 |
| DX | 1000 V - 30 A | 1500 V - 10 A | DX12030620ATRKU6SE | DX12030620AVML5E | DX12030620AVMKU6E | 12 |
| DX..U | 1000 V - 40 A | 1500 V - 15 A | DX1203062UATRKU6SE | DX1203062UAVML5E | DX1203062UAVMKU6E | 12 |
| | 1000 V - 50 A | 1500 V - 20 A | DX1503062UATRKU6SE | DX1503062UAVML5E | DX1503062UAVMKU6E | 12 |
| DX..P | 1000 V - 60 A | 1500 V - 30 A | DX1503062PATRKU6SE | DX1503062PAVML5E | DX1503062PAVMKU6E | 12 |

We are available for additional custom configurations. Feel free to reach out to discuss your specific needs.

# DP-DK-DM-DX Series - 7 inputs / MPPT

N° of poles 7x (1+1)

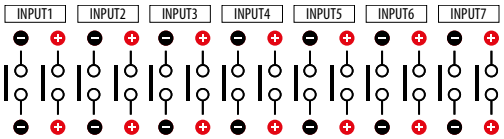


Double mounting

Single hole M16

| Series | PV1 cat. per input | PV1 cat. per input | Code | Code | N° of layers |
|---|---|---|---|---|---|
| DP | 600 V - 32 A | 1000 V - 12 A | DP10012720AVMVU5E | DP10012720AVMVU6E | 14 |
| DK | 750 V - 32 A | 1000 V - 16 A | DK10016720AVMVU5E | DK10016720AVMVU6E | 14 |
| DM | 700 V - 40 A | 1000 V - 20 A | DM10020720AVMVU5E | DM10020720AVMVU6E | 14 |
| DX | 1000 V - 30 A | 1500 V - 10 A | DX12030720AVMVU5E | DX12030720AVMVU6E | 14 |
| DX..U | 1000 V - 40 A | 1500 V - 15 A | DX1203072UAVMVU5E | DX1203072UAVMVU6E | 14 |
| | 1000 V - 50 A | 1500 V - 20 A | DX1503072UAVMVU5E | DX1503072UAVMVU6E | 14 |
| DX..P | 1000 V - 60 A | 1500 V - 30 A | DX1503072PAVMVU5E | DX1503072PAVMVU6E | 14 |

N° of poles 7x (1+1)

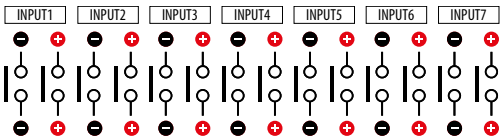


Double mounting

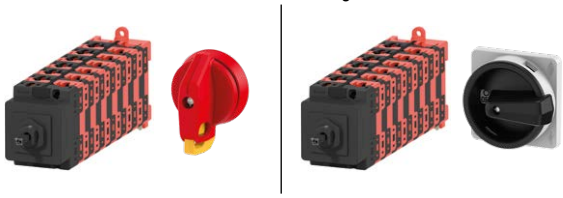

Single hole M16

| Series | PV1 cat. per input | PV1 cat. per input | Code | Code | N° of layers |
|---|---|---|---|---|---|
| DP | 600 V - 32 A | 1000 V - 12 A | DP10012720AVML5E | DP10012720AVMKU6E | 14 |
| DK | 750 V - 32 A | 1000 V - 16 A | DK10016720AVML5E | DK10016720AVMKU6E | 14 |
| DM | 700 V - 40 A | 1000 V - 20 A | DM10020720AVML5E | DM10020720AVMKU6E | 14 |
| DX | 1000 V - 30 A | 1500 V - 10 A | DX12030720AVML5E | DX12030720AVMKU6E | 14 |
| DX..U | 1000 V - 40 A | 1500 V - 15 A | DX1203072UAVML5E | DX1203072UAVMKU6E | 14 |
| | 1000 V - 50 A | 1500 V - 20 A | DX1503072UAVML5E | DX1503072UAVMKU6E | 14 |
| DX..P | 1000 V - 60 A | 1500 V - 30 A | DX1503072PAVML5E | DX1503072PAVMKU6E | 14 |

We are available for additional custom configurations. Feel free to reach out to discuss your specific needs.

# DP-DK-DM-DX Series - 8 inputs / MPPT

N° of poles 8x (1+1)

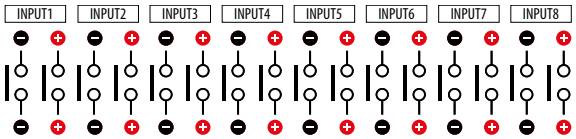


Double mounting

Single hole M16

| Series | PV1 cat. per input | PV1 cat. per input | Code | Code | N° of layers |
|---|---|---|---|---|---|
| DP | 600 V - 32 A | 1000 V - 12 A | DP10012820AVMVU5E | DP10012820AVMVU6E | 16 |
| DK | 750 V - 32 A | 1000 V - 16 A | DK10016820AVMVU5E | DK10016820AVMVU6E | 16 |
| DM | 700 V - 40 A | 1000 V - 20 A | DM10020820AVMVU5E | DM10020820AVMVU6E | 16 |
| DX | 1000 V - 30 A | 1500 V - 10 A | DX12030820AVMVU5E | DX12030820AVMVU6E | 16 |
| DX..U | 1000 V - 40 A | 1500 V - 15 A | DX1203082UAVMVU5E | DX1203082UAVMVU6E | 16 |
| | 1000 V - 50 A | 1500 V - 20 A | DX1503082UAVMVU5E | DX1503082UAVMVU6E | 16 |
| DX..P | 1000 V - 60 A | 1500 V - 30 A | DX1503082PAVMVU5E | DX1503082PAVMVU6E | 16 |

N° of poles 8x (1+1)

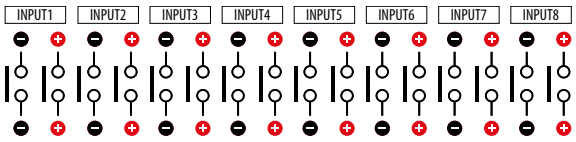


Double mounting

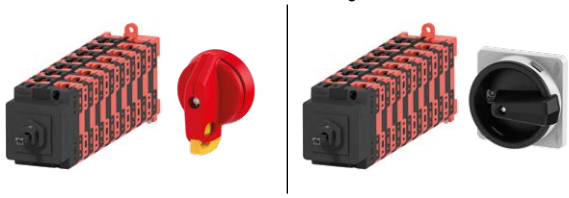

Single hole M16

| Series | PV1 cat. per input | PV1 cat. per input | Code | Code | N° of layers |
|---|---|---|---|---|---|
| DP | 600 V - 32 A | 1000 V - 12 A | DP10012820AVML5E | DP10012820AVMKU6E | 16 |
| DK | 750 V - 32 A | 1000 V - 16 A | DK10016820AVML5E | DK10016820AVMKU6E | 16 |
| DM | 700 V - 40 A | 1000 V - 20 A | DM10020820AVML5E | DM10020820AVMKU6E | 16 |
| DX | 1000 V - 30 A | 1500 V - 10 A | DX12030820AVML5E | DX12030820AVMKU6E | 16 |
| DX..U | 1000 V - 40 A | 1500 V - 15 A | DX1203082UAVML5E | DX1203082UAVMKU6E | 16 |
| | 1000 V - 50 A | 1500 V - 20 A | DX1503082UAVML5E | DX1503082UAVMKU6E | 16 |
| DX..P | 1000 V - 60 A | 1500 V - 30 A | DX1503082PAVML5E | DX1503082PAVMKU6E | 16 |

We are available for additional custom configurations. Feel free to reach out to discuss your specific needs.

# DC ISOLATOR SWITCHES

Enclosed IP65

- Nominal current from 12 A up to 60 A
- Nominal voltage up to 1500 Vdc
- Up to 4 DC Poles switching
- Double insulation ABS thermoplastic enclosure
- IP65 protection degree
- Cover interlock with knob in "ON" position
- Handle padlockable in “OFF” position
- Maximum terminal access
- UV rays resistant materials
- Compact dimensions
- IEC EN 60947 certified

PV1 PV2 RATED

# IB Series

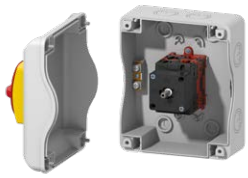

N° of poles 1x (1+1)

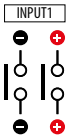


N° of poles 2x (1+1)

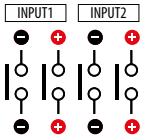

| Series | PV1 cat. per input | PV1 cat. per input | N° of poles | Yellow/Red padlockable handle Code | Grey/Black padlockable handle Code |
|---|---|---|---|---|---|
| IBP | 600 V - 32 A | 1000 V - 12 A | 1x (1+1) | IBP10012120AR | IBP10012120AB |
| | | | 2x (1+1) | IBP10012220AR | IBP10012220AB |
| IBK | 750 V - 32 A | 1000 V - 16 A | 1x (1+1) | IBK10016120AR | IBK10016120AB |
| | | | 2x (1+1) | IBK10016220AR | IBK10016220AB |
| IBM | 700 V - 40 A | 1000 V - 20 A | 1x (1+1) | IBM10020120AR | IBM10020120AB |
| | | | 2x (1+1) | IBM10020220AR | IBM10020220AB |
| IBX | 1000 V - 30 A | 1500 V - 10 A | 1x (1+1) | IBX12030120AR | IBX12030120AB |
| | | | 2x (1+1) | IBX12030220AR | IBX12030220AB |
| IBX..U | 1000 V - 40 A | 1500 V - 15 A | 1x (1+1) | IBX1203012UAR | IBX1203012UAB |
| | | | 2x (1+1) | IBX1203022UAR | IBX1203022UAB |
| | 1000 V - 50 A | 1500 V - 20 A | 1x (1+1) | IBX1503012UAR | IBX1503012UAB |
| | | | 2x (1+1) | IBX1503022UAR | IBX1503022UAB |
| IBX..P | 1000 V - 60 A | 1500 V - 30 A | 1x (1+1) | IBX1503012PAR | IBX1503012PAB |
| | | | 2x (1+1) | IBX1503022PAR | IBX1503022PAB |

# Pre-wired with MC4 connectors

N° of poles 1x (1+1)

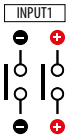


N° of poles 2x (1+1)

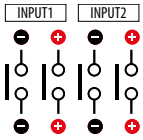

| Series | PV1 cat. per input | PV1 cat. per input | N° of poles | Yellow/Red padlockable handle Code | Grey/Black padlockable handle Code |
|---|---|---|---|---|---|
| IBP | 600 V - 32 A | 1000 V - 12 A | 1x (1+1) | IBP10012120ARMC | IBP10012120ABMC |
| | | | 2x (1+1) | IBP10012220ARMC | IBP10012220ABMC |
| IBK | 750 V - 32 A | 1000 V - 16 A | 1x (1+1) | IBK10016120ARMC | IBK10016120ABMC |
| | | | 2x (1+1) | IBK10016220ARMC | IBK10016220ABMC |
| IBM | 700 V - 40 A | 1000 V - 20 A | 1x (1+1) | IBM10020120ARMC | IBM10020120ABMC |
| | | | 2x (1+1) | IBM10020220ARMC | IBM10020220ABMC |
| IBX | 1000 V - 30 A | 1500 V - 10 A | 1x (1+1) | IBX12030120ARMC | IBX12030120ABMC |
| | | | 2x (1+1) | IBX12030220ARMC | IBX12030220ABMC |
| IBX..U | 1000 V - 40 A | 1500 V - 15 A | 1x (1+1) | IBX1203012UARMC | IBX1203012UABMC |
| | | | 2x (1+1) | IBX1203022UARMC | IBX1203022UABMC |
| | 1000 V - 50 A | 1500 V - 20 A | 1x (1+1) | IBX1503012UARMC | IBX1503012UABMC |
| | | | 2x (1+1) | IBX1503022UARMC | IBX1503022UABMC |

## Features

### Dimensions
Panel mounting L - Fixing M16

Dimension in mm
in [inch]

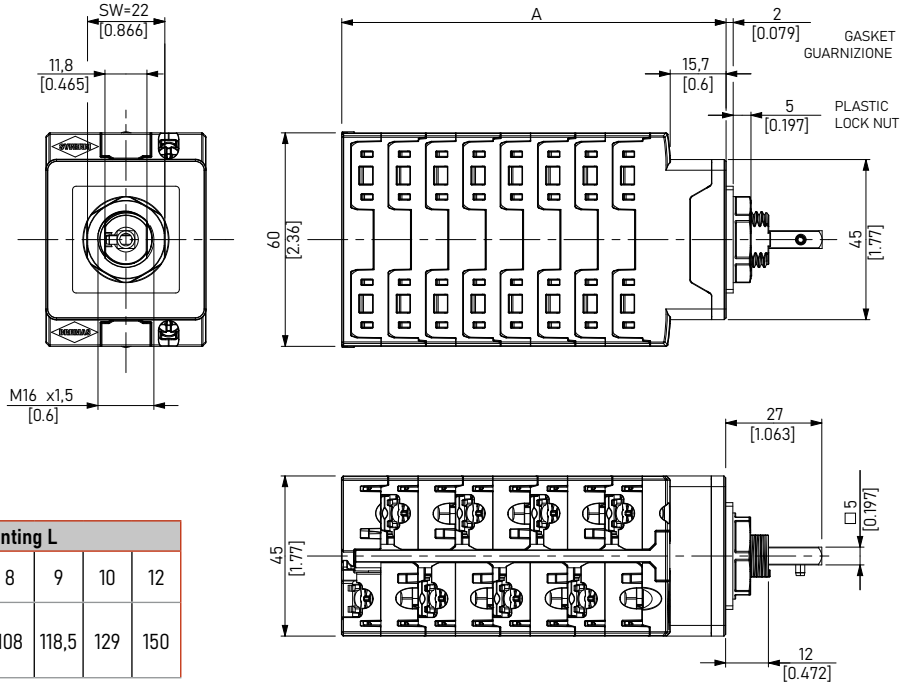


| | Panel mounting L | | | | | | | |
|---|---|---|---|---|---|---|---|---|
| **Number of layers** | 2 | 3 | 4 | 6 | 8 | 9 | 10 | 12 |
| **A dimensions (mm)** | 45 | 55,5 | 66 | 87 | 108 | 118,5 | 129 | 150 |

### Dimensions
Panel mounting T - Fixing with 4 screws 36x36 mm

Dimension in mm
in [inch]

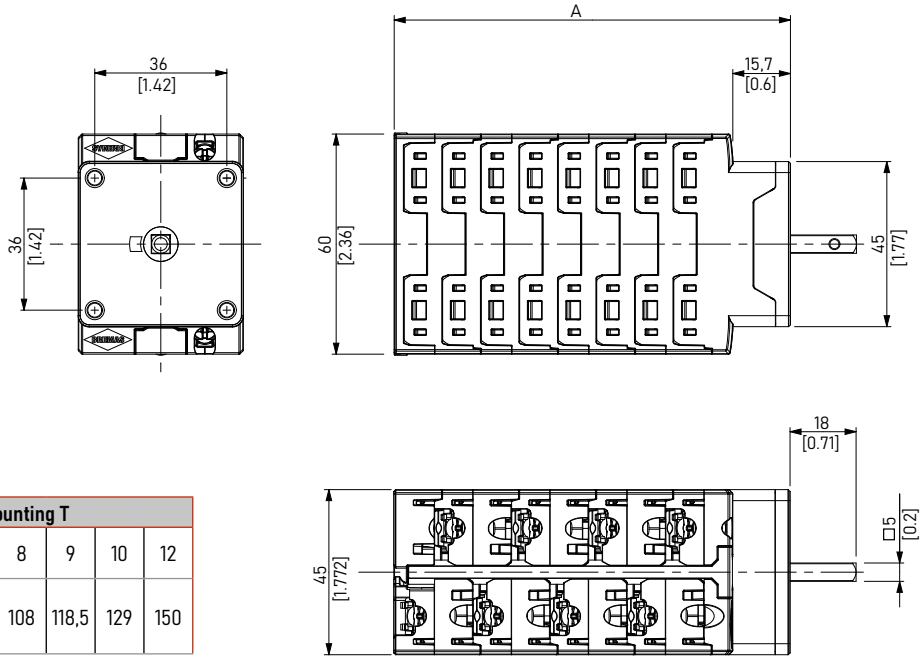


| | Panel mounting T | | | | | | | |
|---|---|---|---|---|---|---|---|---|
| **Number of layers** | 2 | 3 | 4 | 6 | 8 | 9 | 10 | 12 |
| **A dimensions (mm)** | 45 | 55,5 | 66 | 87 | 108 | 118,5 | 129 | 150 |

## Dimensions
Panel mounting C - Fixing with 4 screws 48x48 mm

Dimension in mm
in [inch]

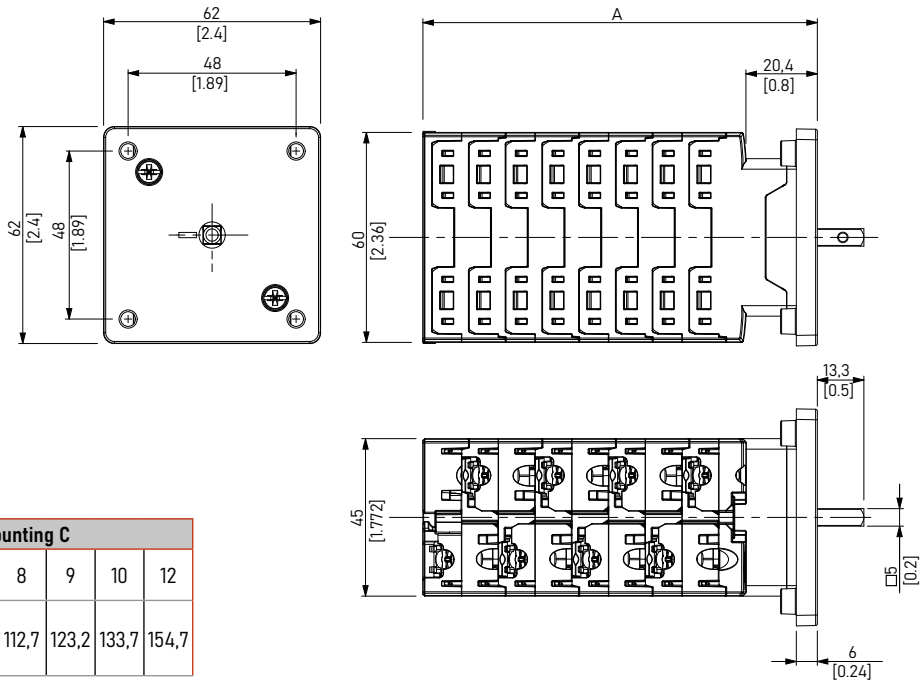


| | Panel mounting C | | | | | | | |
|---|---|---|---|---|---|---|---|---|
| **Number of layers** | 2 | 3 | 4 | 6 | 8 | 9 | 10 | 12 |
| **A dimensions (mm)** | 49,7 | 60,2 | 70,7 | 91,7 | 112,7 | 123,2 | 133,7 | 154,7 |

## Dimensions
Double mounting V - Fixing M16

Dimension in mm
in [inch]

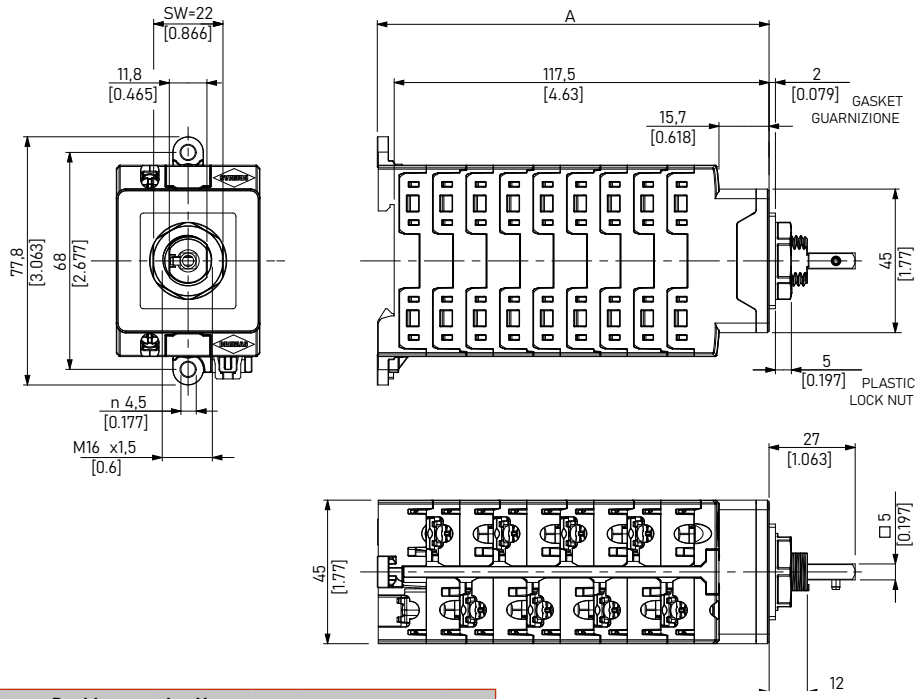


| | Double mounting V | | | | | | | | | | | | | | |
|---|---|---|---|---|---|---|---|---|---|---|---|---|---|---|---|
| **Number of layers** | 2 | 3 | 4 | 5 | 6 | 7 | 8 | 9 | 10 | 11 | 12 | 13 | 14 | 15 | 16 |
| **A dimensions (mm)** | 49,3 | 59,8 | 70,3 | 80,8 | 91,3 | 101,8 | 112,3 | 122,8 | 133,3 | 143,8 | 154,3 | 164,8 | 175,3 | 185,8 | 196,3 |

## Dimensions
Double mounting W - Fixing with 4 screws 36x36 mm

Dimension in mm
in [inch]

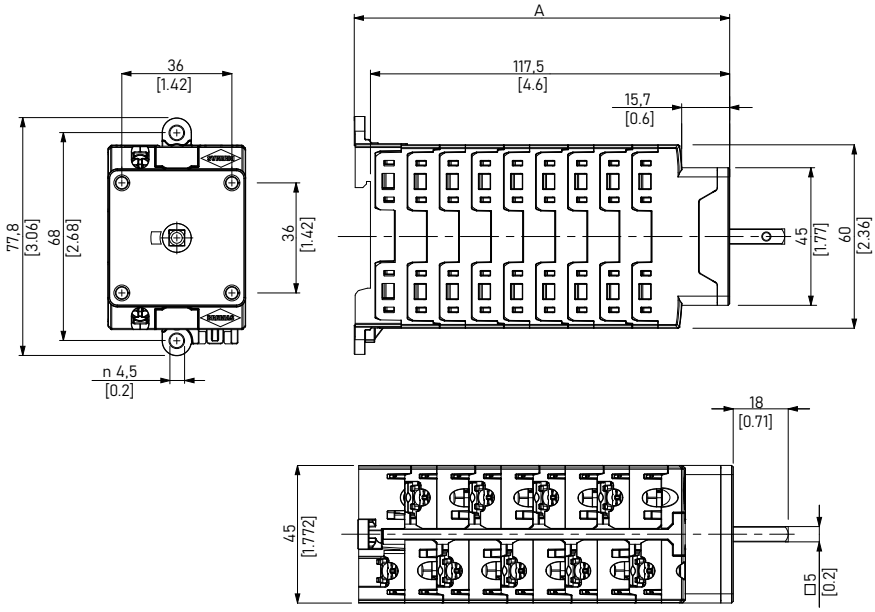


| | Double mounting W | | | | | | | | | | | | | | |
|---|---|---|---|---|---|---|---|---|---|---|---|---|---|---|---|
| **Number of layers** | 2 | 3 | 4 | 5 | 6 | 7 | 8 | 9 | 10 | 11 | 12 | 13 | 14 | 15 | 16 |
| **A dimensions (mm)** | 49,3 | 59,8 | 70,3 | 80,8 | 91,3 | 101,8 | 112,3 | 122,8 | 133,3 | 143,8 | 154,3 | 164,8 | 175,3 | 185,8 | 196,3 |

## Dimensions
Double mounting J - Fixing with 4 screws 48x48 mm

Dimension in mm
in [inch]

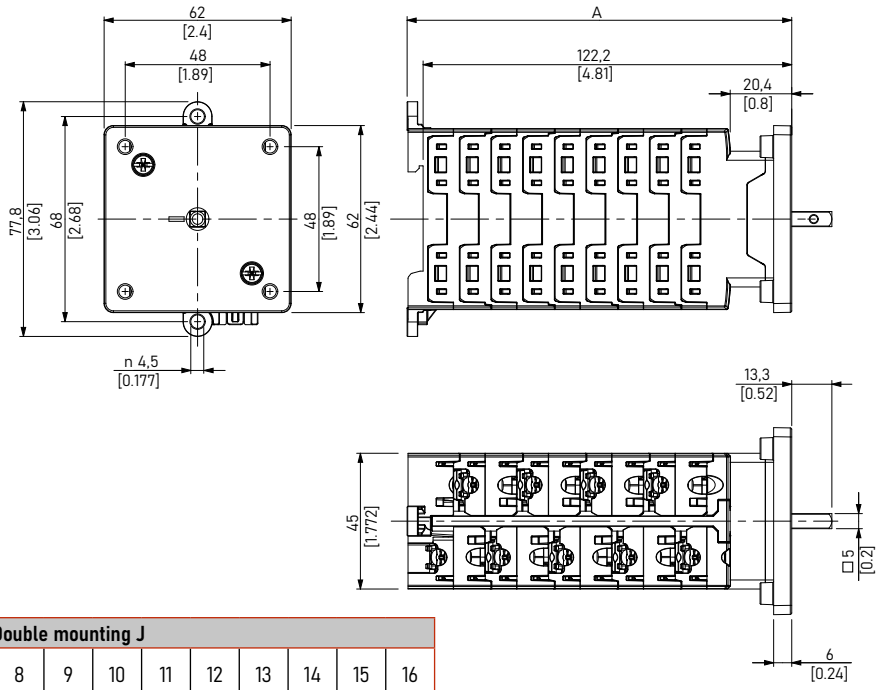


| | Double mounting J | | | | | | | | | | | | | | |
|---|---|---|---|---|---|---|---|---|---|---|---|---|---|---|---|
| **Number of layers** | 2 | 3 | 4 | 5 | 6 | 7 | 8 | 9 | 10 | 11 | 12 | 13 | 14 | 15 | 16 |
| **A dimensions (mm)** | 54 | 64,5 | 75 | 85,5 | 96 | 106,5 | 117 | 127,5 | 138 | 148,5 | 159 | 169,5 | 180 | 190,5 | 201 |

## Dimensions

Base mounting D - Back-side for DIN rail or 2 screws fixing
For standard distribution boards (45 mm window)
With pre-mounted knob RND

Dimension in mm
in [inch]

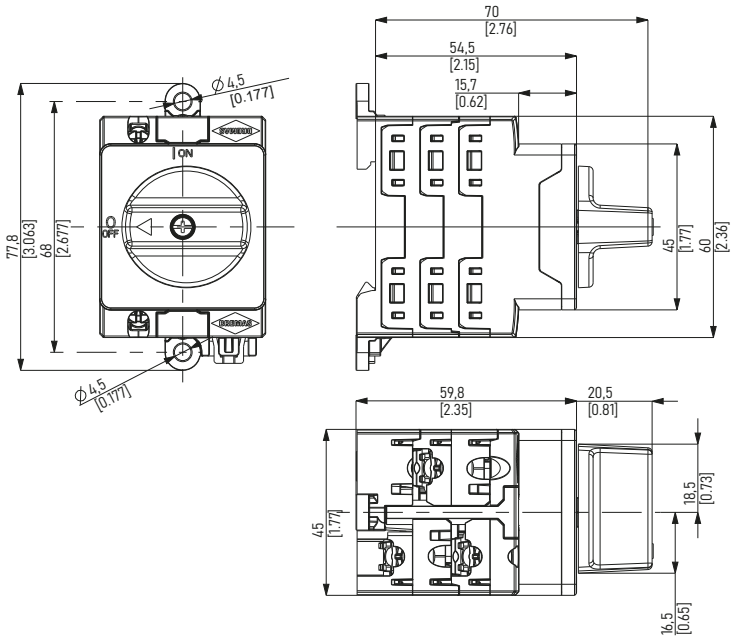


## Dimensions

Base mounting D - Back-side for DIN rail or 2 screws fixing
For standard distribution boards (45 mm window)
With pre-mounted padlockable knob RLE

Dimension in mm
in [inch]

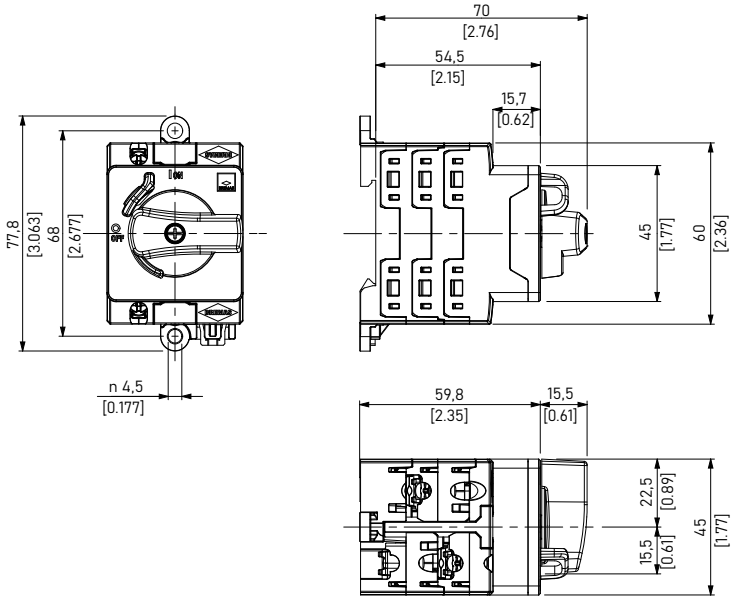

## Dimensions

Base mounting E - Back-side for DIN rail or 2 screws fixing
For direct operation
With pre-mounted knob (RW4)

Dimension in mm
in [inch]

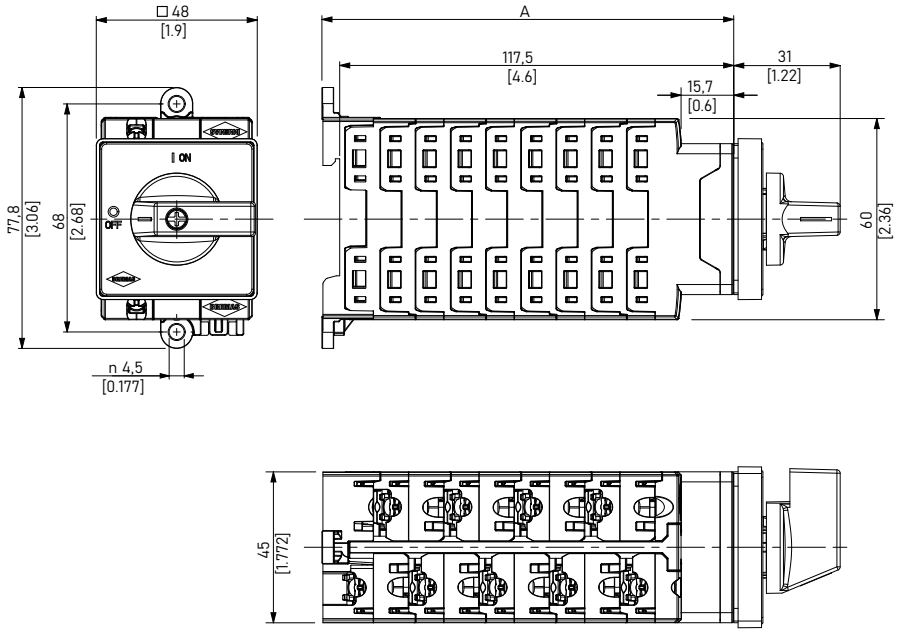


| | Base mounting E | | | | | | | | | | | |
|---|---|---|---|---|---|---|---|---|---|---|---|---|
| **Number of layers** | 2 | 3 | 4 | 5 | 6 | 7 | 8 | 9 | 10 | 11 | 12 | 13 |
| **A dimensions (mm)** | 49,3 | 59,8 | 70,3 | 80,8 | 91,3 | 101,8 | 112,3 | 122,8 | 133,3 | 143,8 | 154,3 | 164,8 |

## Dimensions

IB Series

Dimension in mm
in [inch]

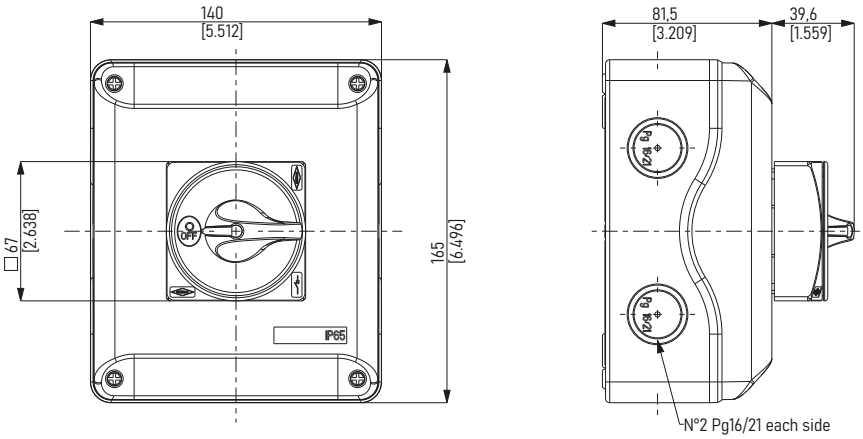

## Dimensions
IB Series pre-wired with MC4 connectors 2P

Dimension in mm
in [inch]

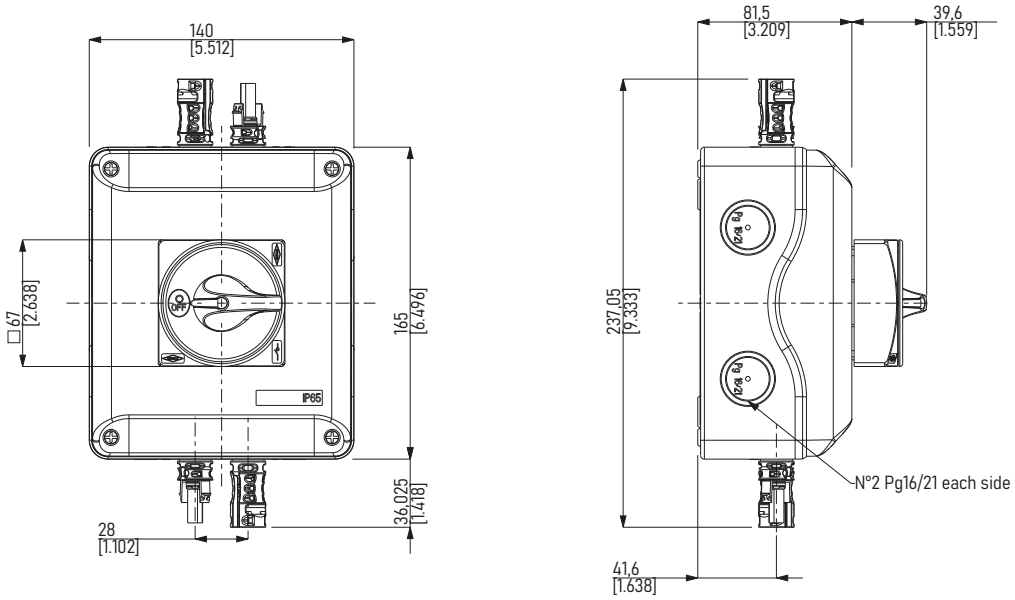


## Dimensions
IB Series pre-wired with MC4 connectors 4P

Dimension in mm
in [inch]

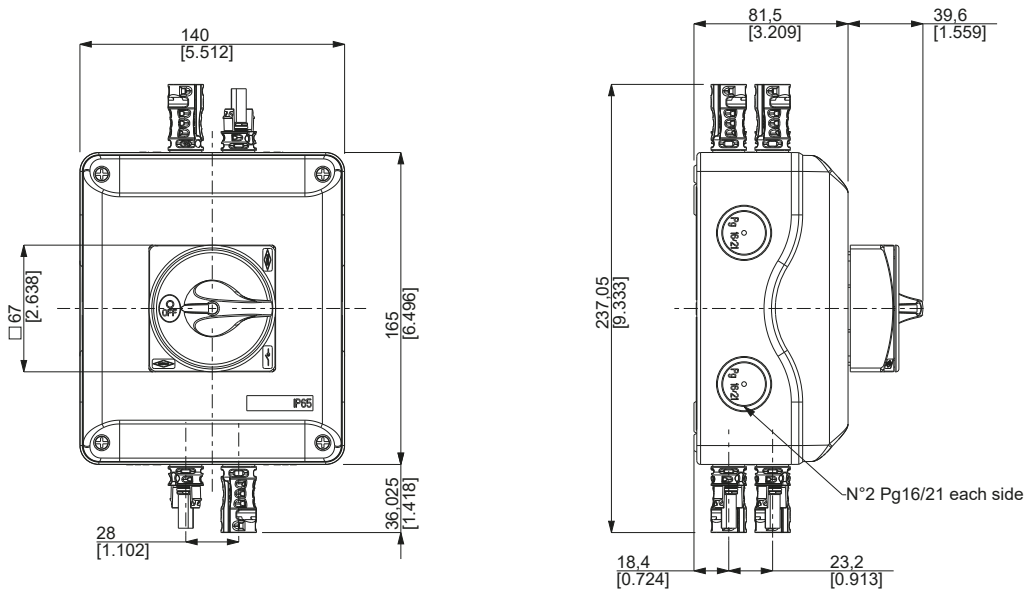

## Dimensions
Drilling templates - Mounting type L

Dimension in mm
in [inch]

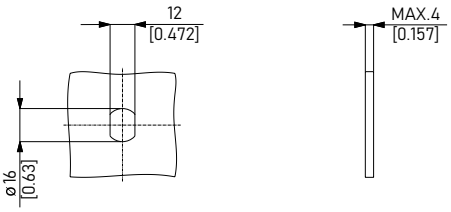


## Dimensions
Drilling templates - Mounting type T

Dimension in mm
in [inch]

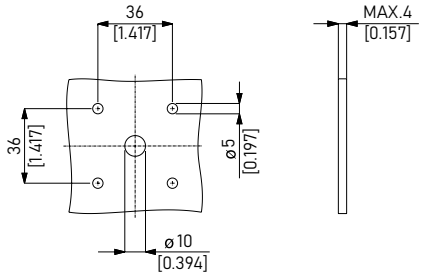


## Dimensions
Drilling templates - Mounting type C

Dimension in mm
in [inch]

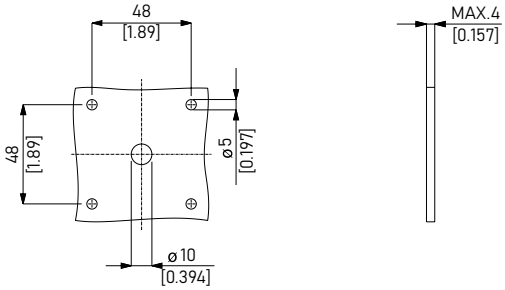


## Dimensions
Drilling templates - Mounting type D / E

Dimension in mm
in [inch]

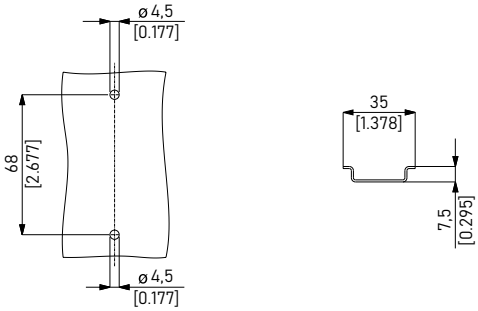

## Dimensions
Drilling templates - Mounting type V

Dimension in mm
in [inch]

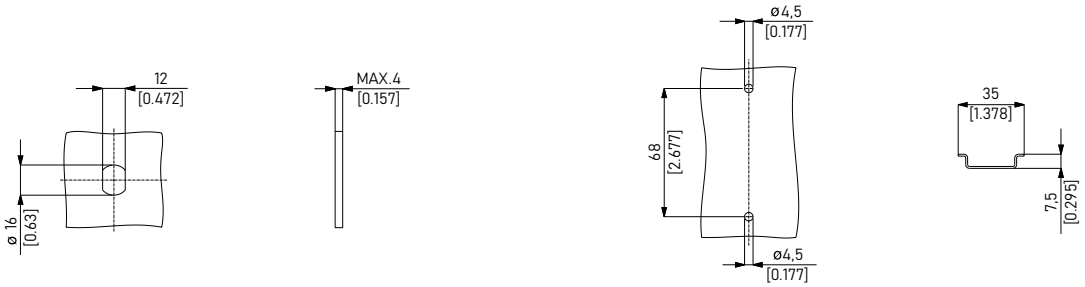


## Dimensions
Drilling templates - Mounting type W

Dimension in mm
in [inch]

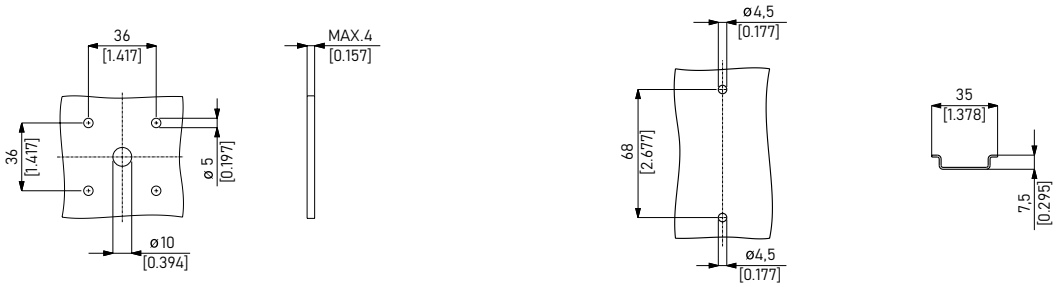


## Dimensions
Drilling templates - Mounting type J

Dimension in mm
in [inch]

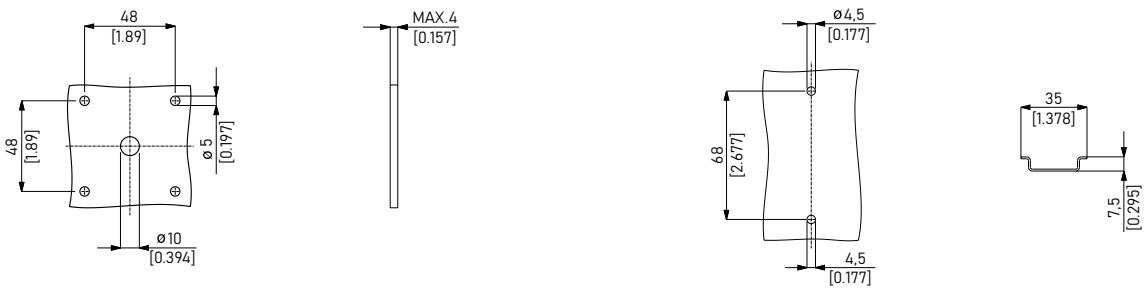

BREMAS

BETTER SWITCHES

# SURGE PROTECTIVE DEVICES

## DC and AC SPDs

04

# DC SURGE PROTECTIVE DEVICES

Advanced protection for PV systems - SAPV Series

**DC**

Surge
Protective
Devices

Up to **1500V DC**

- Optimized for photovoltaic systems in DC application, ensuring maximum performance and reliability.
- According to standard EN 50539-11.
- Certified Surge Protective Device (SPD) Type 2 / Class II and Type 1+2 / Class I+II.
- Incorporates Metal Oxide Varistors (MOV) for superior surge discharge performance.
- Pluggable solution, to facilitate maintenance.
- Equipped with an integrated disconnection system (OCFM) for safe end-of-life operation.
- Front-side local status indication for real-time monitoring.
- Optional remote status signaling with a changeover relay.
- IP20-rated terminals for enhanced safety.
- Designed for quick and secure DIN rail mounting.
- Suitable for indoor installations in controlled environments.

# SAPV Series

TYPE 2 / Class II

| Max. continuous operating voltage | Impulse current (10/350 µs) | Tot. discharge current (10/350 µs) | Nominal discharge current (8/20 µs) | Max. discharge current (8/20 µs) | Voltage protection level | | Code | Remote signaling |
|---|---|---|---|---|---|---|---|---|
| $U_{CPV}$ (Vdc) | $I_{imp}$ (kA) | $I_{tot}$ (kA) | $I_n$ (kA) | $I_{max}$ (kA) | $U_P$ (kV) | | | |
| | | | | | (DC+) - PE, (DC-) - PE | (DC+) - (DC-) | | |
| 600 | - | - | 20 | 40 | 2,2 | - | **SAPV060T2** | No |
| 1000 | - | - | 20 | 40 | 4 | 4 | **SAPV100T2** | No |
| 1500 | - | - | 20 | 40 | 5,2 | 5,2 | **SAPV150T2** | No |
| 600 | - | - | 20 | 40 | 2,2 | - | **SAPV060T2R** | Yes |
| 1000 | - | - | 20 | 40 | 4 | 4 | **SAPV100T2R** | Yes |
| 1500 | - | - | 20 | 40 | 5,2 | 5,2 | **SAPV150T2R** | Yes |

TYPE 1+2 / Class I+II

| Max. continuous operating voltage | Impulse current (10/350 µs) | Tot. discharge current (10/350 µs) | Nominal discharge current (8/20 µs) | Max. discharge current (8/20 µs) | Voltage protection level | | Code | Remote signaling |
|---|---|---|---|---|---|---|---|---|
| $U_{CPV}$ (Vdc) | $I_{imp}$ (kA) | $I_{tot}$ (kA) | $I_n$ (kA) | $I_{max}$ (kA) | $U_P$ (kV) | | | |
| | | | | | (DC+) - PE, (DC-) - PE | (DC+) - (DC-) | | |
| 600 | 6,25 | 12,5 | 20 | 40 | 2,2 | - | **SAPV060T12** | No |
| 1000 | 6,25 | 12,5 | 20 | 40 | 4 | 4 | **SAPV100T12** | No |
| 1500 | 6,25 | 12,5 | 20 | 40 | 5,2 | 5,2 | **SAPV150T12** | No |
| 600 | 6,25 | 12,5 | 20 | 40 | 2,2 | - | **SAPV060T12R** | Yes |
| 1000 | 6,25 | 12,5 | 20 | 40 | 4 | 4 | **SAPV100T12R** | Yes |
| 1500 | 6,25 | 12,5 | 20 | 40 | 5,2 | 5,2 | **SAPV150T12R** | Yes |

# Accessories

Replacement plug

| Description | Max. continuous operating voltage | Code | Type / Class |
|---|---|---|---|
| | $U_{CPV}$ (Vdc) | | |
| For SPD DC Type 2 / Class II | 600 | **SAXCPV060T2** | 2 / II |
| | 1000 | **SAXCPV100T2** | 2 / II |
| | 1500 | **SAXCPV150T2** | 2 / II |
| For SPD DC Type 1+2 / Class I+II | 600 | **SAXCPV060T12** | 1+2 / I+II |
| | 1000 | **SAXCPV100T12** | 1+2 / I+II |
| | 1500 | **SAXCPV150T12** | 1+2 / I+II |

## Technical data

| | | | | SAPV060T2 | SAPV060T2R |
|---|---|---|---|---|---|
| **Standards** | | | | | |
| **Applicable Standards** | | | | IEC 61643-31 / EN 50536-11 | |
| **Technical data** | | | | | |
| **Maximum continuous operating voltage** | (DC+) - PE, (DC-) - PE | $U_{CPV}$ | V | 600 | |
| | (DC+) - (DC-) | | | - | |
| **Nominal discharge current (8/20 µs)** | | $I_n$ | kA | 20 | |
| **Impulse Discharge Current (10/350 µs)** | | $I_{imp}$ | kA | - | |
| **Total discharge current (10/350 µs)** | | $I_{tot}$ | kA | - | |
| **Total discharge current (8/20 µs)** | | $I_{tot}$ | kA | 40 | |
| **Maximum discharge current (8/20 µs)** | | $I_{max}$ | kA | 40 | |
| **Voltage protection level** | (DC+) - PE, (DC-) - PE | $U_P$ | V | 2,2 | |
| | (DC+) - (DC-) | | | - | |
| **Response time** | | $t_A$ | ns | < 25 | |
| **Short-circuit current rating** | | $I_{scpv}$ | kA | 10 | |
| **Number of ports** | | Nr | | 1 | |
| **Functional data** | | | | | |
| **IEC/EN category** | Type / Class | | | 2 / II | |
| **Protective elements** | | | | High energy MOV | |
| **Mechanical characteristics** | | | | | |
| **Terminal screw torque** | | $M_{max}$ | Nm | 4,5 | |
| **Conductor cross section (max)** | | Solid, Stranded | $mm^2$ | 35 | |
| | | | AWG | 2 | |
| | | Flexible | | 25 | |
| | | | AWG | 4 | |
| **Mounting** | | | | 35 mm DIN rail, EN 60715 | |
| **Degree of protection** | | | | IP20 (built-in) | |
| **Housing material** | | | | Thermoplastic Extinguishing Degree UL 94 V-0 | |
| **Thermal Protection** | | | | Yes | |
| **Operating State / Fault Indication** | | | | Green ok / Red defect | |
| **Remote Contacts** | Switching capacity | AC | V | - | 250 / 125 |
| | | | A | - | 0,5 / 0,2 |
| | | DC | V | - | 250 / 75 |
| | | | A | - | 0,1 / 0,5 |
| | Conductor cross section (max) | Solid | | - | 1,5 |
| | | | AWG | - | 16 |
| **Dimensions (W-D-H)** | | | mm | 36 x 67 x 90 | 36 x 67 x 96 |
| **Weight** | | | g | 29,9 | 30,3 |
| **Ambient conditions** | | | | | |
| **Permissible operating humidity** | | | %HR | 5 ÷ 95 | |
| **Operating temperature** | | $T_a$ | °C | -40 ÷ +70 | |
| **Atmospheric pressure and altitude** | | | k Pa | 80 ÷ 106 | |
| | | | m | -500 / 2000 | |
| **Installation** | | | | Indoor | |
| **Accessories** | | | | | |
| **Replacement plug** | | | | SAXCPV060T2 | |

TYPE 2 / Class II

| SAPV100T2 | SAPV100T2R | SAPV150T2 | SAPV150T2R |
|---|---|---|---|
| | | | |
| IEC 61643-31 / EN 50536-11 | | IEC 61643-31 / EN 50536-11 | |
| | | | |
| 1000 | | 1500 | |
| 1000 | | 1500 | |
| 20 | | 20 | |
| - | | - | |
| - | | - | |
| 40 | | 40 | |
| 40 | | 40 | |
| 4 | | 5,2 | |
| 4 | | 5,2 | |
| < 25 | | < 25 | |
| 10 | | 10 | |
| 1 | | 1 | |
| | | | |
| 2 / II | | 2 / II | |
| High energy MOV | | High energy MOV | |
| | | | |
| 4,5 | | 4,5 | |
| 35 | | 35 | |
| 2 | | 2 | |
| 25 | | 25 | |
| 4 | | 4 | |
| 35 mm DIN rail, EN 60715 | | 35 mm DIN rail, EN 60715 | |
| IP20 (built-in) | | IP20 (built-in) | |
| Thermoplastic<br>Extinguishing Degree UL 94 V-0 | | Thermoplastic<br>Extinguishing Degree UL 94 V-0 | |
| Yes | | Yes | |
| Green ok / Red defect | | Green ok / Red defect | |
| - | 250 / 125 | - | 250 / 125 |
| - | 0,5 / 0,2 | - | 0,5 / 0,2 |
| - | 250 / 75 | - | 250 / 75 |
| - | 0,1 / 0,5 | - | 0,1 / 0,5 |
| - | 1,5 | - | 1,5 |
| - | 16 | - | 16 |
| 54 x 67 x 90 | 54 x 67 x 96 | 54 x 67 x 90 | 54 x 67 x 96 |
| 29,9 | 30,3 | 32,4 | 33,1 |
| | | | |
| 5 ÷ 95 | | 5 ÷ 95 | |
| -40 ÷ +70 | | -40 ÷ +70 | |
| 80 ÷ 106 | | 80 ÷ 106 | |
| -500 / 2000 | | -500 / 2000 | |
| Indoor | | Indoor | |
| | | | |
| SAXCPV100T2 | | SAXCPV150T2 | |

## Technical data

| | | | | SAPV060T12 | SAPV060T12R |
|---|---|---|---|---|---|
| **Standards** | | | | | |
| **Applicable Standards** | | | | IEC 61643-31 / EN 50536-11 | |
| **Technical data** | | | | | |
| **Maximum continuous operating voltage** | (DC+) - PE, (DC-) - PE | $U_{CPV}$ | V | 600 | |
| | (DC+) - (DC-) | | | - | |
| **Nominal discharge current (8/20 µs)** | | $I_n$ | kA | 20 | |
| **Impulse Discharge Current (10/350 µs)** | | $I_{imp}$ | kA | 6,25 | |
| **Total discharge current (10/350 µs)** | | $I_{tot}$ | kA | 12,5 | |
| **Total discharge current (8/20 µs)** | | $I_{tot}$ | kA | 40 | |
| **Maximum discharge current (8/20 µs)** | | $I_{max}$ | kA | 40 | |
| **Voltage protection level** | (DC+) - PE, (DC-) - PE | $U_P$ | V | 2,2 | |
| | (DC+) - (DC-) | | | - | |
| **Response time** | | $t_A$ | ns | < 25 | |
| **Short-circuit current rating** | | $I_{scpv}$ | kA | 10 | |
| **Number of ports** | | Nr | | 1 | |
| **Functional data** | | | | | |
| **IEC/EN category** | Type / Class | | | 1+2 / I+II | |
| **Protective elements** | | | | High energy MOV | |
| **Mechanical characteristics** | | | | | |
| **Terminal screw torque** | | $M_{max}$ | Nm | 4,5 | |
| **Conductor cross section (max)** | | Solid, Stranded | $mm^2$ | 35 | |
| | | | AWG | 2 | |
| | | Flexible | | 25 | |
| | | | AWG | 4 | |
| **Mounting** | | | | 35 mm DIN rail, EN 60715 | |
| **Degree of protection** | | | | IP20 (built-in) | |
| **Housing material** | | | | Thermoplastic Extinguishing Degree UL 94 V-0 | |
| **Thermal Protection** | | | | Yes | |
| **Operating State / Fault Indication** | | | | Green ok / Red defect | |
| **Remote Contacts** | Switching capacity | AC | V | - | 250 / 125 |
| | | | A | - | 0,5 / 0,2 |
| | | DC | V | - | 250 / 75 |
| | | | A | - | 0,1 / 0,5 |
| | Conductor cross section (max) | Solid | | - | 1,5 |
| | | | AWG | - | 16 |
| **Dimensions (W-D-H)** | | | mm | 54 x 81 x 90 | 54 x 81 x 96 |
| **Weight** | | | g | 44 | 44,7 |
| **Ambient conditions** | | | | | |
| **Permissible operating humidity** | | | %HR | 5 ÷ 95 | |
| **Operating temperature** | | $T_a$ | °C | -40 ÷ +70 | |
| **Atmospheric pressure and altitude** | | | k Pa | 80 ÷ 106 | |
| | | | m | -500 / 2000 | |
| **Installation** | | | | Indoor | |
| **Accessories** | | | | | |
| **Replacement plug** | | | | SAXCPV060T12 | |

TYPE 1+2 / Class I+II

| SAPV100T12 | SAPV100T12R | SAPV150T12 | SAPV150T12R |
|---|---|---|---|
| | | | |
| IEC 61643-31 / EN 50536-11 | | IEC 61643-31 / EN 50536-11 | |
| | | | |
| 1000 | | 1500 | |
| 1000 | | 1500 | |
| 20 | | 20 | |
| 6,25 | | 6,25 | |
| 12,5 | | 12,5 | |
| 40 | | 40 | |
| 40 | | 40 | |
| 4 | | 5,2 | |
| 4 | | 5,2 | |
| < 25 | | < 25 | |
| 10 | | 10 | |
| 1 | | 1 | |
| | | | |
| 1+2 / I+II | | 1+2 / I+II | |
| High energy MOV | | High energy MOV | |
| | | | |
| 4,5 | | 4,5 | |
| 35 | | 35 | |
| 2 | | 2 | |
| 25 | | 25 | |
| 4 | | 4 | |
| 35 mm DIN rail, EN 60715 | | 35 mm DIN rail, EN 60715 | |
| IP20 (built-in) | | IP20 (built-in) | |
| Thermoplastic Extinguishing Degree UL 94 V-0 | | Thermoplastic Extinguishing Degree UL 94 V-0 | |
| Yes | | Yes | |
| Green ok / Red defect | | Green ok / Red defect | |
| - | 250 / 125 | - | 250 / 125 |
| - | 0,5 / 0,2 | - | 0,5 / 0,2 |
| - | 250 / 75 | - | 250 / 75 |
| - | 0,1 / 0,5 | - | 0,1 / 0,5 |
| - | 1,5 | - | 1,5 |
| - | 16 | - | 16 |
| 54 x 81 x 90 | 54 x 81 x 96 | 54 x 81 x 90 | 54 x 81 x 96 |
| 44 | 44,7 | 46,2 | 47 |
| | | | |
| 5 ÷ 95 | | 5 ÷ 95 | |
| -40 ÷ +70 | | -40 ÷ +70 | |
| 80 ÷ 106 | | 80 ÷ 106 | |
| -500 / 2000 | | -500 / 2000 | |
| Indoor | | Indoor | |
| | | | |
| SAXCPV100T12 | | SAXCPV150T12 | |

## Electrical circuit

SAPV ... T2
SAPV ... T12

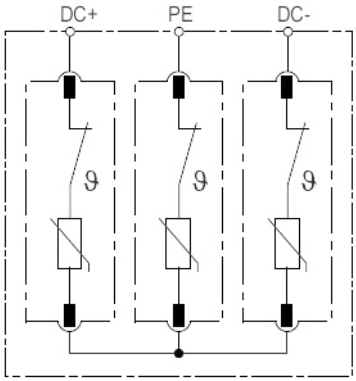


SAPV ... T2R
SAPV ... T12R

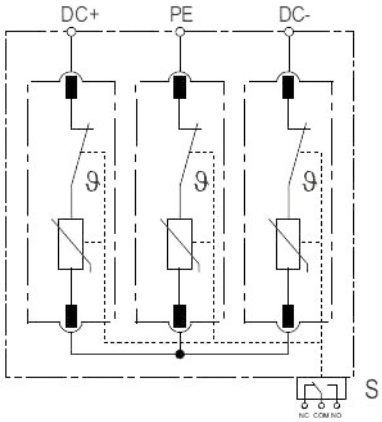

## Features

### Mounting

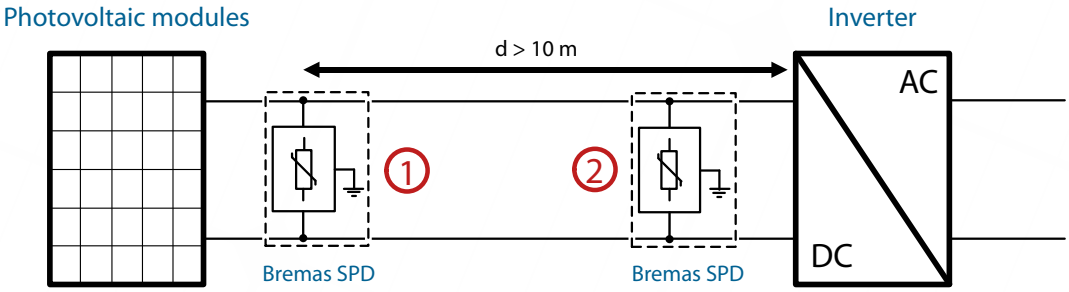


If d < 10 m, the Bremas SPD 2 is not required

### Dimensions

SAPV ... T2
SAPV ... T2R

Dimension in mm

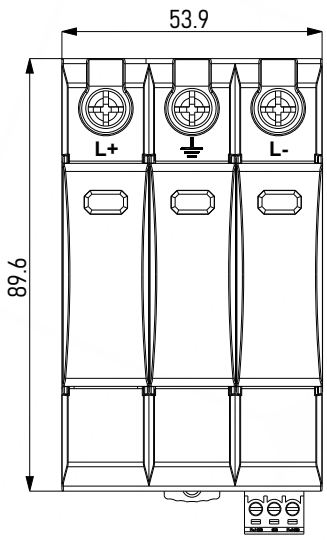


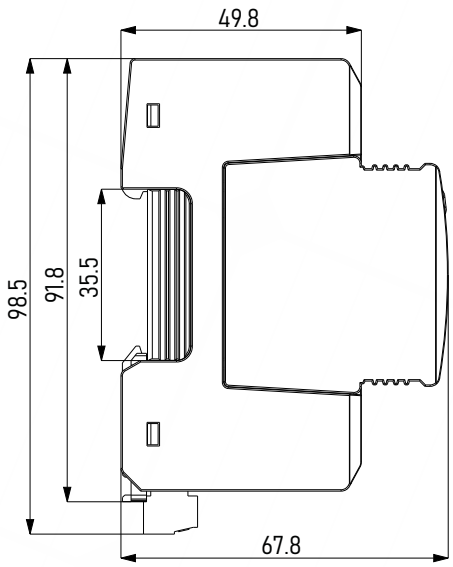


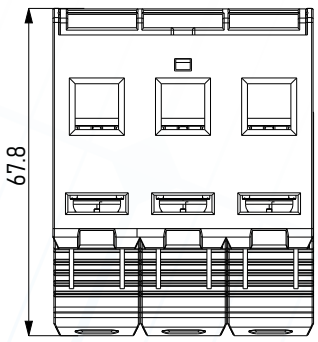

## Dimensions

SAPV ... T12
SAPV ... T12R

Dimension in mm

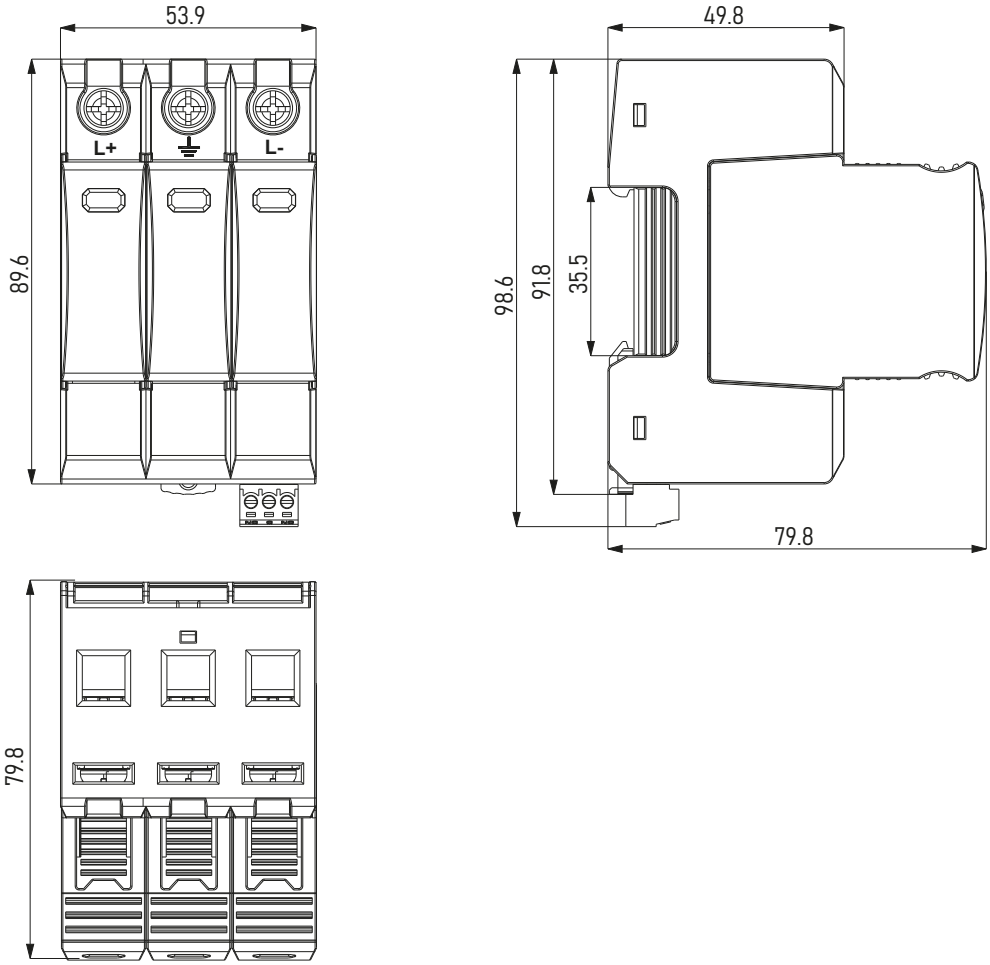

# AC SURGE PROTECTIVE DEVICES

Advanced protection for LV systems - SA Series

AC

Surge
Protective
Devices

- Engineered to safeguard low-voltage distribution boards from atmospheric surges.
- Delivers optimal surge protection for TN-S and TT systems.
- Certified Surge Protective Device (SPD) Type 2 / Class II and Type 1+2 / Class I+II.
- Incorporates Metal Oxide Varistors (MOV) and Gas Discharger Tubes (GDT) for superior surge discharge performance.
- Pluggable design for easy maintenance, featuring a mechanical coding system to prevent replacement errors.
- Equipped with an integrated disconnection system (OCFM) for safe end-of-life operation.
- Front-side local status indication for easy monitoring.
- Optional remote status signaling with a changeover relay.
- IP20-rated terminals for enhanced safety.
- Designed for quick and secure DIN rail mounting.
- Suitable for indoor installations in controlled environments.

# SA Series

TYPE 2 / Class II

| Max. continuous operating voltage | | Impulse current (10/350 µs) | | Nominal discharge current (8/20 µs) | | Max. discharge current (8/20 µs) | | Voltage protection level | | Code | Remote signaling |
|---|---|---|---|---|---|---|---|---|---|---|---|
| $U_{CPV}$ (Vdc) | | $I_{imp}$ (kA) | | $I_n$ (kA) | | $I_{max}$ (kA) | | $U_P$ (kV) | | | |
| L-N | N-PE | L-N | N-PE | L-N | N-PE | L-N | N-PE | L-N | N-PE | | |
| 320 | 255 | - | - | 20 | | 40 | | 1,6 | 1,5 | **SA40T2A1N032** | No |
| 320 | 255 | - | - | 20 | | 40 | | 1,6 | 1,5 | **SA40T2A1N032R** | Yes |

| Max. continuous operating voltage | | Impulse current (10/350 µs) | | Nominal discharge current (8/20 µs) | | Max. discharge current (8/20 µs) | | Voltage protection level | | Code | Remote signaling |
|---|---|---|---|---|---|---|---|---|---|---|---|
| $U_{CPV}$ (Vdc) | | $I_{imp}$ (kA) | | $I_n$ (kA) | | $I_{max}$ (kA) | | $U_P$ (kV) | | | |
| L-N | N-PE | L-N | N-PE | L-N | N-PE | L-N | N-PE | L-N | N-PE | | |
| 320 | 255 | - | - | 20 | | 40 | | 1,6 | 1,5 | **SA40T2A3N032** | No |
| 320 | 255 | - | - | 20 | | 40 | | 1,6 | 1,5 | **SA40T2A3N032R** | Yes |

TYPE 1+2 / Class I+II

| Max. continuous operating voltage | | Impulse current (10/350 µs) | | Nominal discharge current (8/20 µs) | | Max. discharge current (8/20 µs) | | Voltage protection level | | Code | Remote signaling |
|---|---|---|---|---|---|---|---|---|---|---|---|
| $U_{CPV}$ (Vdc) | | $I_{imp}$ (kA) | | $I_n$ (kA) | | $I_{max}$ (kA) | | $U_P$ (kV) | | | |
| L-N | N-PE | L-N | N-PE | L-N | N-PE | L-N | N-PE | L-N | N-PE | | |
| 320 | 255 | 12,5 | 25 | 20 | 25 | 50 | | 1,6 | 1,5 | **SA40T121N032** | No |
| 320 | 255 | 12,5 | 25 | 20 | 25 | 50 | | 1,6 | 1,5 | **SA40T121N032R** | Yes |

| Max. continuous operating voltage | | Impulse current (10/350 µs) | | Nominal discharge current (8/20 µs) | | Max. discharge current (8/20 µs) | | Voltage protection level | | Code | Remote signaling |
|---|---|---|---|---|---|---|---|---|---|---|---|
| $U_{CPV}$ (Vdc) | | $I_{imp}$ (kA) | | $I_n$ (kA) | | $I_{max}$ (kA) | | $U_P$ (kV) | | | |
| L-N | N-PE | L-N | N-PE | L-N | N-PE | L-N | N-PE | L-N | N-PE | | |
| 320 | 255 | 12,5 | 50 | 20 | 25 | 50 | 100 | 1,6 | 1,5 | **SA40T123N032** | No |
| 320 | 255 | 12,5 | 50 | 20 | 25 | 50 | 100 | 1,6 | 1,5 | **SA40T123N032R** | Yes |

# Accessories

Replacement plug

| Description | Max. continuous operating voltage | Suitable for | Code | Type / Class |
|---|---|---|---|---|
| | $U_{CPV}$ (Vdc) | | | |
| For SPD AC Type 2 / Class II | 320 | L-N | **SAXC40320T2** | 2 / II |
| | 255 | N-PE | **SAXC40260T2** | 2 / II |
| For SPD AC Type 1+2 / Class I+II | 320 | L-N | **SAXC40320T12** | 1+2 / I+II |
| | 255 | N-PE | **SAXC40260T12** | 1+2 / I+II |

## Technical data

| | | | | TYPE 2 / Class II | | TYPE 1+2 / Class I+II | |
|---|---|---|---|---|---|---|---|
| | | | | SA40T2A 1N/3N 032 | SA40T2A 1N/3N 032 R | SA40T12 1N/3N 032 | SA40T12 1N/3N 032 R |
| **Standards** | | | | | | | |
| **Applicable Standards** | | | | IEC EN 61643-31 | | IEC EN 61643-31 | |
| **Technical data** | | | | | | | |
| **Nominal AC Voltage (50/60 Hz)** | | $U_n$ | $V_{AC}$ | 230 | | 230 | |
| **Maximum continuous operating voltage** | L-N | $U_C$ | | 320 | | 320 | |
| | N-PE | | | 255 | | 255 | |
| **Nominal discharge current (8/20 µs)** | L-N | $I_n$ | kA | 20 | | 20 | |
| | N-PE | | | 20 | | 25 | |
| **Impulse discharge current (10/350 µs)** | L-N | $I_{imp}$ | kA | - | | 12,5 | |
| | N-PE | | | - | | 25 (1N) / 50 (3N) | |
| **Maximum discharge current (8/20 µs)** | L-N | $I_{max}$ | kA | 40 | | 50 | |
| | N-PE | | | 40 | | 50 (1N) / 100 (3N) | |
| **Specific energy** | L-N | W/R | kJ / Ω | - | | 36 (1N) / 39 (3N) | |
| | N-PE | | | - | | 156 (1N) / 625 (3N) | |
| **Charge** | L-N | Q | $A_S$ | - | | 6,25 | |
| | N-PE | | | - | | 12,5 (1N) / 25 (3N) | |
| **Voltage protection level** | L-N | | kV | 1,6 | | 1,6 | |
| | N-PE | | | 1,5 | | 1,5 | |
| **Follow current interrupt rating** | N-PE | $A_{rms}$ | | 100 | | 100 | |
| **Response time** | L-N | $t_A$ | ns | < 25 | | < 25 | |
| | N-PE | | | < 100 | | < 100 | |
| **Back-up fuse (max)** | gL / gG | | A | 125 | | 160 | |
| **Short-circuit current rating** | L-N | $I_{sccr}$ | kA | 25 / 50 | | 25 / 50 | |
| **TOV withstand 5s** | L-N | $U_t$ | V | 335 | | 335 | |
| **TOV 120min** | L-N | | V | 440 | | 440 | |
| | | mode | | Safe fail | | Safe fail | |
| **TOV withstand 200ms** | N-PE | | V | 1200 | | 1200 | |
| **Number of ports** | | Nr | | 1 | | 1 | |
| **Functional data** | | | | | | | |
| **IEC/EN category** | Type / Class | | | 2 / II | | 1+2 / I+II | |
| **Protective elements** | | | | High energy MOV and GDT | | High energy MOV and GDT | |
| **Protection mode** | | | | L-N / N-PE | | L-N / N-PE | |

| | | | | TYPE 2 / Class II | | TYPE 1+2 / Class I+II | |
|---|---|---|---|---|---|---|---|
| | | | | SA40T2A 1N/3N 032 | SA40T2A 1N/3N 032 R | SA40T12 1N/3N 032 | SA40T12 1N/3N 032 R |
| **Mechanical characteristics** | | | | | | | |
| **Terminal screw torque** | | $M_{max}$ | Nm | 4,5 | | 4,5 | |
| **Conductor cross section (max)** | | Solid, Stranded | $mm^2$ | 35 | | 35 | |
| | | | AWG | 2 | | 2 | |
| | | Flexible | | 25 | | 25 | |
| | | | AWG | 4 | | 4 | |
| **Mounting** | | | | 35 mm DIN rail, EN 60715 | | 35 mm DIN rail, EN 60715 | |
| **Degree of protection** | | | | IP20 (built-in) | | IP20 (built-in) | |
| **Housing material** | | | | UL 94 V-0 (non-spread and self-extinguishing characteristics) | | UL 94 V-0 (non-spread and self-extinguishing characteristics) | |
| **Thermal Protection** | | | | Yes | | Yes | |
| **Operating State / Fault Indication** | | | | Green ok / Red defect | | Green ok / Red defect | |
| **Remote Contacts** | Switching capacity | AC | V | - | 250 / 125 | - | 250 / 125 |
| | | | A | - | 0,5 / 0,2 | - | 0,5 / 0,2 |
| | | DC | V | - | 250 / 75 | - | 250 / 75 |
| | | | A | - | 0,1 / 0,5 | - | 0,1 / 0,5 |
| | Conductor cross section (max) | Solid | | - | 1,5 | - | 1,5 |
| | | | AWG | - | 16 | - | 16 |
| **Dimensions (W-D-H)** | | | mm | 36 x 67 x 90 (1N) | 36 x 67 x 96 (1N) | 36 x 81 x 90 (1N) | 36 x 81 x 96 (1N) |
| | | | | 72 x 67 x 90 (3N) | 72 x 67 x 96 (3N) | 72 x 81 x 90 (3N) | 72 x 81 x 96 (3N) |
| **Weight** | 1N/3N | | g | 19 / 36,5 | 19,3 / 37,2 | 25,2 / 54 | 25,8 / 54,9 |
| **Ambient conditions** | | | | | | | |
| **Permissible operating humidity** | | | %HR | 5 ÷ 95 | | 5 ÷ 95 | |
| **Operating temperature** | | $T_a$ | °C | -40 ÷ +70 | | -40 ÷ +70 | |
| **Atmospheric pressure and altitude** | | | k Pa | 80 ÷ 106 | | 80 ÷ 106 | |
| | | | m | -500 / 2000 | | -500 / 2000 | |
| **Installation** | | | | Indoor | | Indoor | |
| **Accessories** | | | | | | | |
| **Replacement plug** | L-N | | | SAXC40320T2 | | SAXC40320T12 | |
| | N-PE | | | SAXC40260T2 | | SAXC40260T12 | |

## Electrical circuit

SA40T21N ...
SA40T121N ...

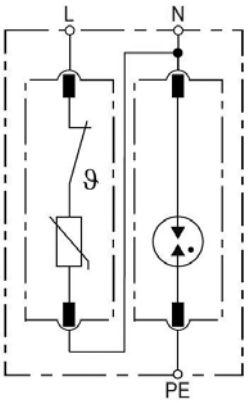


SA40T21N ... R
SA40T121N ... R

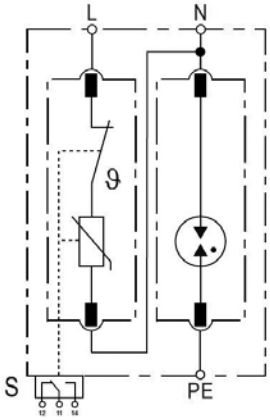


SA40T23N ...
SA40T123N ...

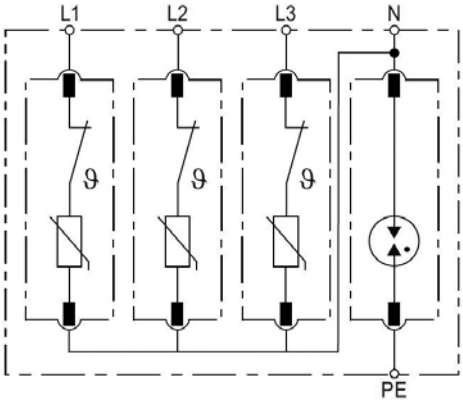


SA40T23N ... R
SA40T123N ... R

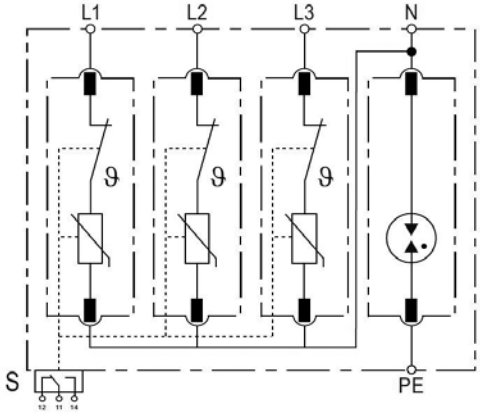

## Features

### Mounting

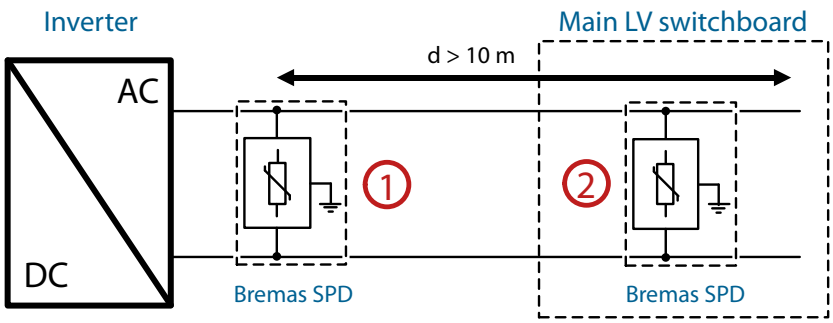


If d < 10 m, the Bremas SPD 2 is not required

### Dimensions

SA40T21N ...
SA40T21N ... R

Dimension in mm

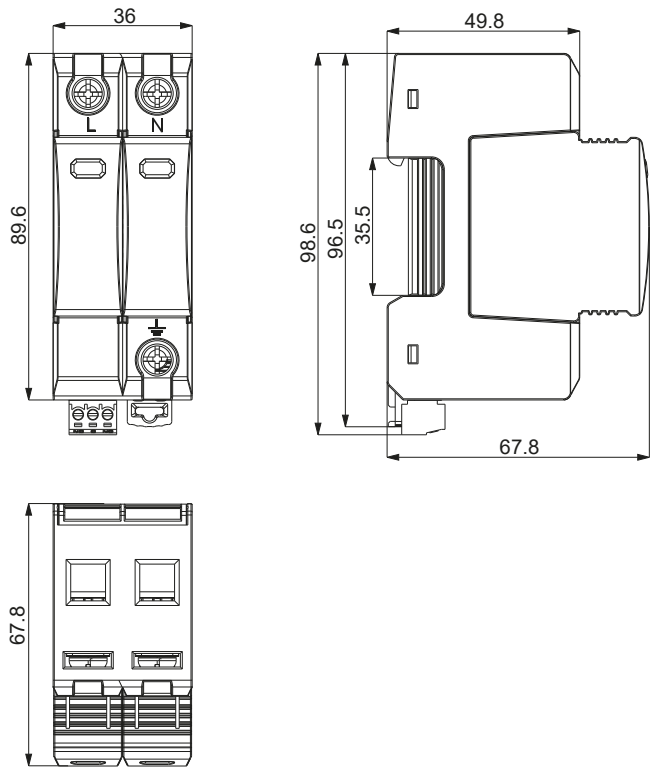

## Dimensions

SA40T23N ...

SA40T23N ... R

Dimension in mm

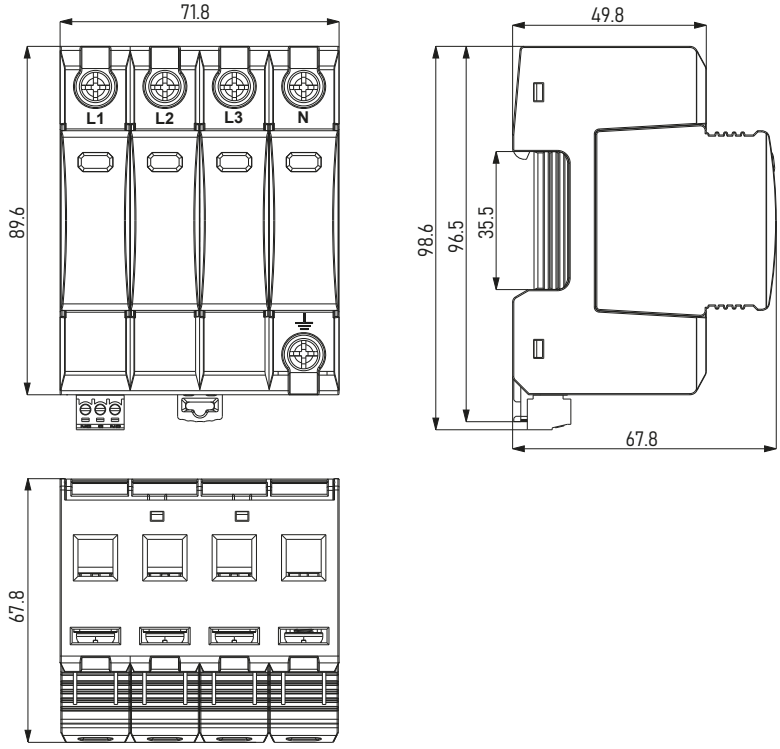


## Dimensions

SA40T121N ...

SA40T121N ... R

Dimension in mm

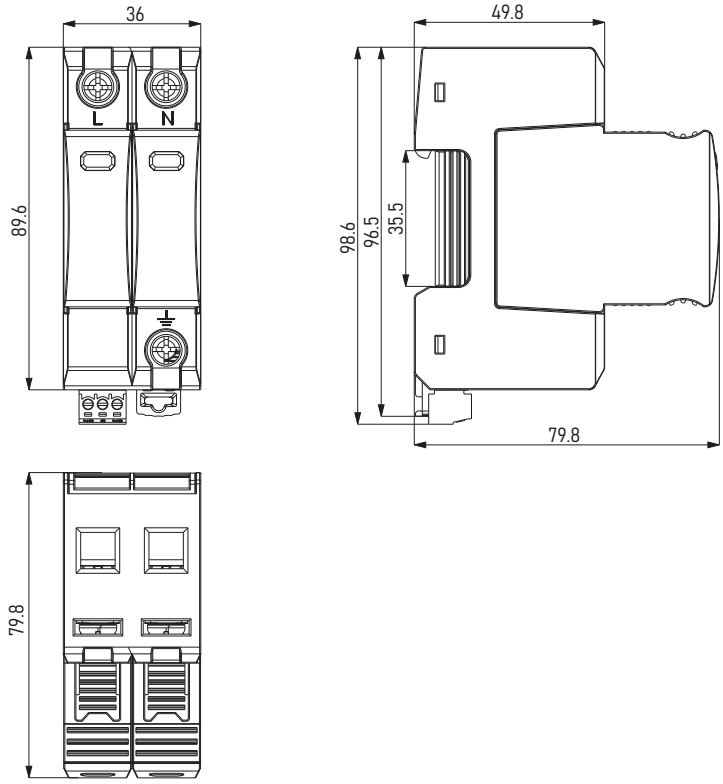

## Dimensions

SA40T123N ...

SA40T123N ... R

Dimension in mm

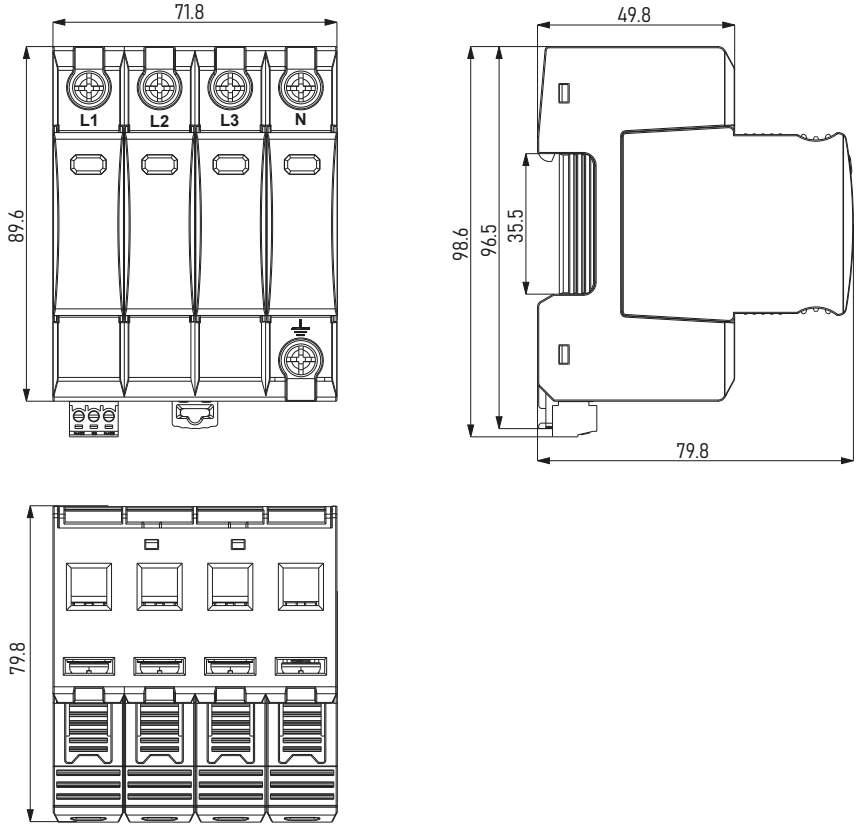

BREMAS

BETTER SWITCHES

# FUSE HOLDERS

## DC fuse holders 1000 Vdc

05

# DC FUSE HOLDERS AND FUSE LINK

Fuse Protection - FHPV and CH10 Series

DC

Fuse
Protection

- Specifically designed for photovoltaic systems in DC application.
- Certified according to IEC 60269 and EN 60947-3.
- Suitable for system voltage up tp 1000 Vdc.
- Rated current up to 32 A.
- High breaking capacity fuse link for fault current protection.
- Compact fuse holders for DIN rail mounting.
- IP20-rated terminals for enhanced safety.
- Easy and safe replacement of the fuse cartridge.
- Visual indicator for fuse status (blown fuse detection).
- Ideal for use in PV combiner boxes and inverter protections.
- Suitable for indoor installations in controlled environments.

# FHPV Series

1 pole

2 poles

| Fuse size* | Rated voltage | Rated current | N° of poles | LED indicator | Code |
|---|---|---|---|---|---|
| mm | $V_n$ (Vdc) | $I_n$ (A) | | | |
| 10x38 gPV | 1000 | 32 | 1 | No | FHPV1001P |
| | | | | Yes | FHPV1001PL |
| | | | 2 | No | FHPV1002P |
| | | | | Yes | FHPV1002PL |

* not included

# 10x38 gPV 1000V - Fuse-links Series

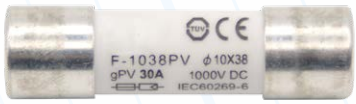


| Fuse size* | Rated voltage | Rated current | Code |
|---|---|---|---|
| mm | $V_n$ (Vdc) | $I_n$ (A) | |
| 10x38 gPV | 1000 | 8 | F1038PV08 |
| | | 10 | F1038PV10 |
| | | 12 | F1038PV12 |
| | | 15 | F1038PV15 |
| | | 20 | F1038PV20 |

* other currents available upon request

## Technical data - Fuse holders

| | | | FHPV | | FHPV...L | |
|---|---|---|---|---|---|---|
| | | | 1P | 2P | 1P | 2P |
| **Standards** | | | | | | |
| **Applicable Standards** | | | IEC 60947-1<br>IEC 60947-3 | | IEC 60947-1<br>IEC 60947-3 | |
| **Technical data** | | | | | | |
| **Fuse size** | | | 10x38 gPV | | 10x38 gPV | |
| **Version** | | | Without indicator | | Led indicator | |
| **Rated voltage** | $V_n$ | Vdc | 1000 | | 1000 | |
| **Rated current** | $I_n$ | A | 32 | | 32 | |
| **Rated conditional short-circuit current** | | kA | 20 | | 20 | |
| **Rated insulation voltage** | $U_i$ | V | 3110 | | 3110 | |
| **Rated imp. withstand voltage** | $U_{imp}$ | kV | 6 | | 6 | |
| **Max power dissipation of the fuse-link** | | W | ≤6W at 100% of the rated current<br>≤3W at 70% of the rated current | | ≤6W at 100% of the rated current<br>≤3W at 70% of the rated current | |
| **LED indicator operating range** | | $V_{dc}$ | - | | 1000 | |
| **Utilization category** | | | DC-PV0 | | DC-PV0 | |
| **Mechanical characteristics** | | | | | | |
| **N° of poles** | | | 2 | | 2 | |
| **Degree of protection** | | | IP20 | | IP20 | |
| **Terminal screw torque** | | Nm | 3,5 | | 3,5 | |
| **Conductor cross section (max)** | Solid, Stranded | $mm^2$ | 16 | | 16 | |
| | | AWG | 2 | | 2 | |
| | Flexible | $mm^2$ | 16 | | 16 | |
| | | AWG | 4 | | 4 | |
| **Mounting** | | | 35 mm DIN rail,<br>EN 60715 | | 35 mm DIN rail,<br>EN 60715 | |
| **Weight** | | g | 60,3 | 120,6 | 60,3 | 120,6 |
| **Ambient condition** | | | | | | |
| **Humidity** | | %HR | 90 | | 90 | |
| **Operating ambient air temperature** | | °C | -5/+40 | | -5/+40 | |

## Technical data - Fuse links

| | | | | F1038PV08 | F1038PV10 | F1038PV12 | F1038PV15 | F1038PV20 |
|---|---|---|---|---|---|---|---|---|
| **Standards** | | | | | | | | |
| **Applicable Standards** | | | | IEC 60269-6 | IEC 60269-6 | IEC 60269-6 | IEC 60269-6 | IEC 60269-6 |
| **Technical data** | | | | | | | | |
| **Fuse size** | | | | 10x38 gPV | 10x38 gPV | 10x38 gPV | 10x38 gPV | 10x38 gPV |
| **Rated voltage** | | $V_n$ | Vdc | 1000 | 1000 | 1000 | 1000 | 1000 |
| **Rated current** | | $I_n$ | A | 8 | 10 | 12 | 15 | 20 |
| **Breaking capacity** | | IEC | kA | 30 | 30 | 30 | 30 | 30 |
| **Pre-arcing Joule integral** | L/R=2ms | | $A^2S$ | 17 | 8,3 | 22 | 49 | 86 |
| **Operating Joule integral** | L/R=2ms | | | 65 | 33 | 73 | 145 | 245 |
| **Power dissipation** | 0,7 x $I_n$ | Pd | W | 0,8 | 1 | 0,8 | 1 | 1,3 |
| | $I_n$ | | | 1,9 | 2,4 | 1,9 | 2,2 | 3,2 |
| **Weight** | | | g | 10 | 10 | 10 | 10 | 10 |

## Time current characteristics I/t

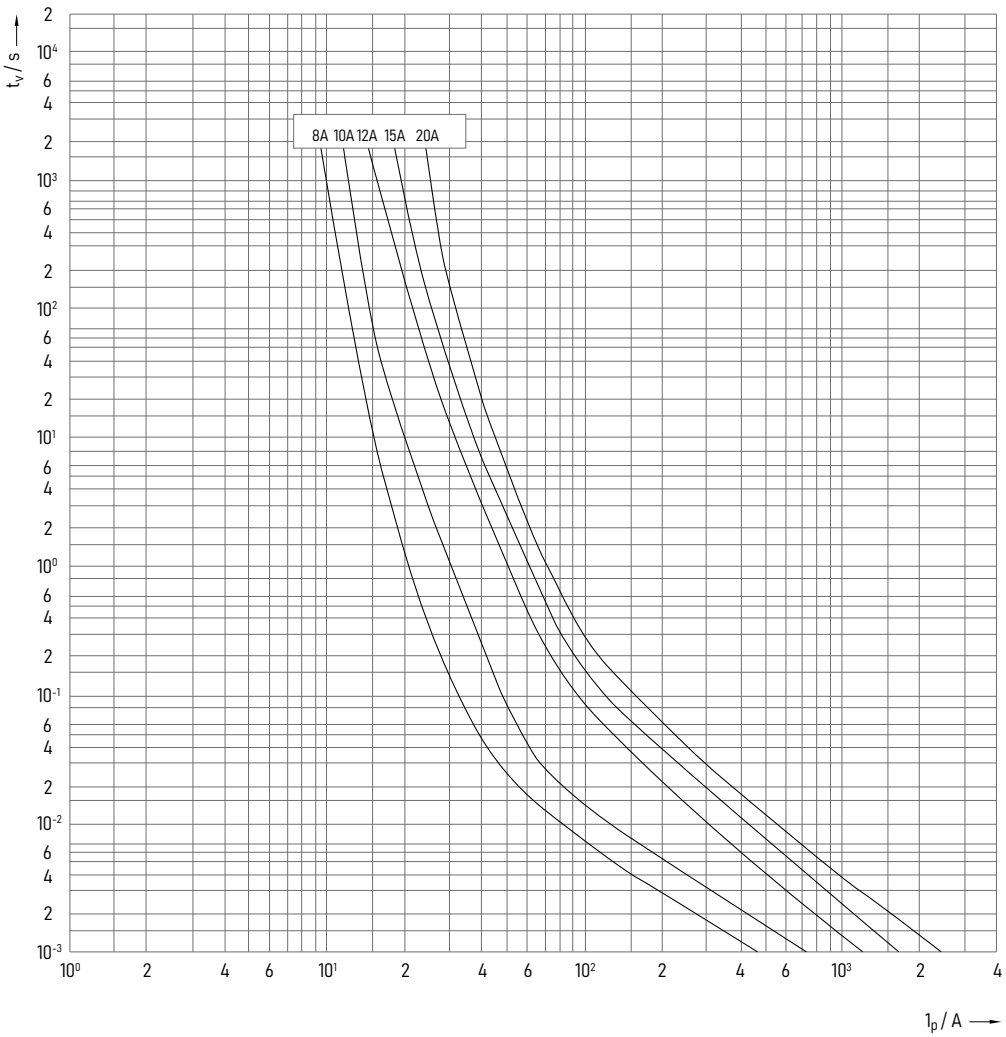

## Ambient air temperature of fuse-link

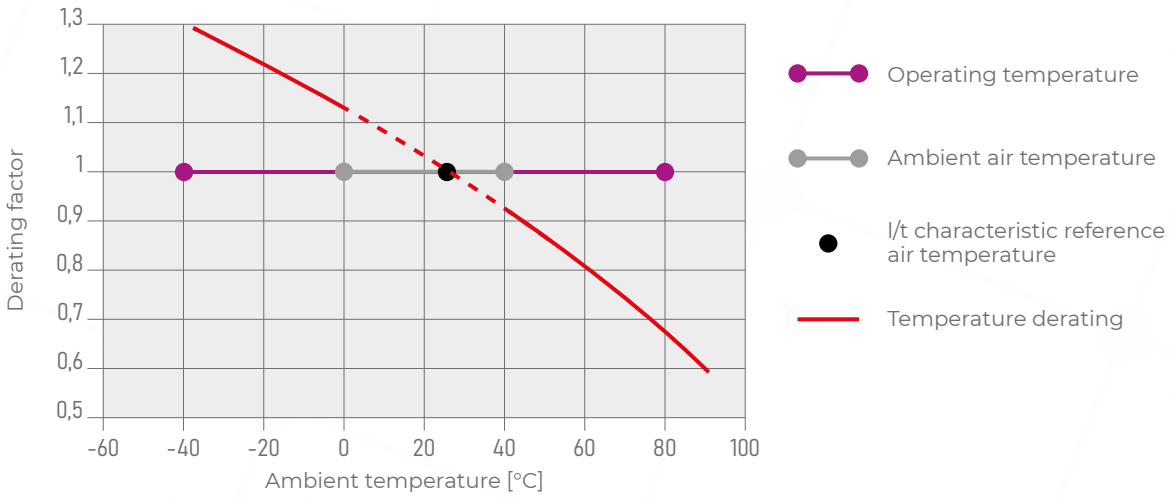


**Legend:**

$T_{amb}$ - Ambient Temperature

TDF - Temperature Derating Factor

$I_N$ - Nominal Current of Fuse-link

$I_{TDF}$ - Nominal Current Including Temperature Derating Factor

**Current calculation:** $I_{TDF} = I_N \times TDF$

## Features

### Dimensions
FHPV 1001P...

Dimension in mm

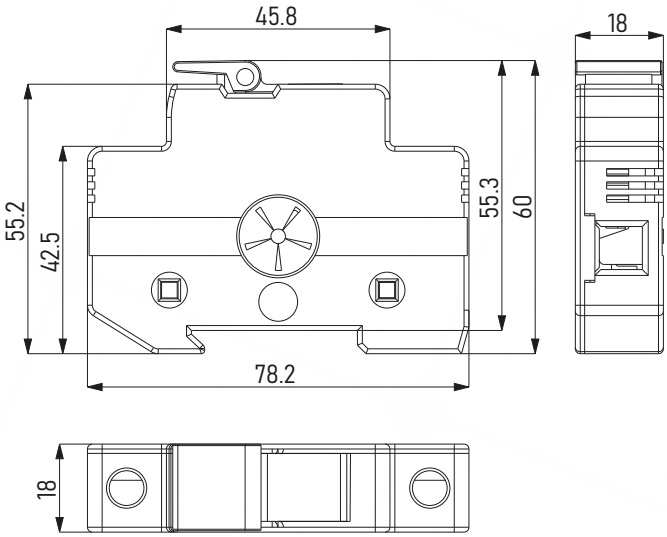


### Dimensions
FHPV1002P...

Dimension in mm

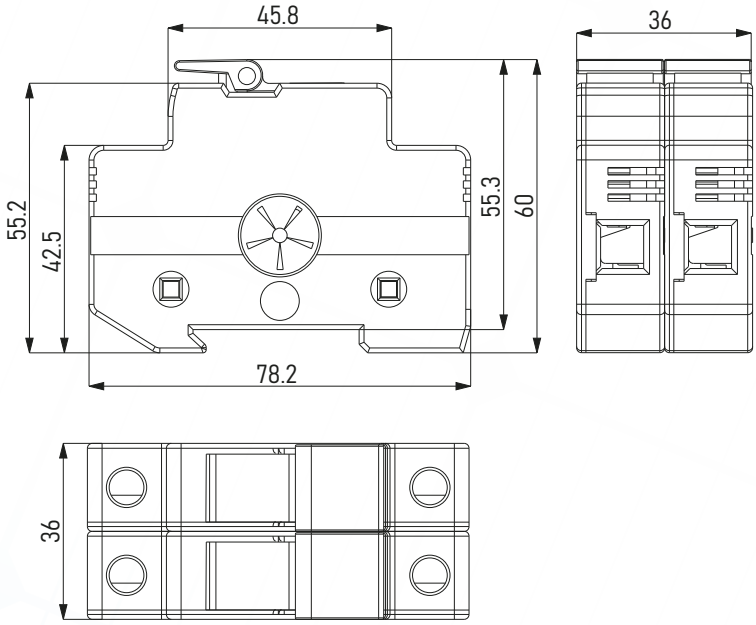

## Dimensions

F1038PV...

Dimension in mm

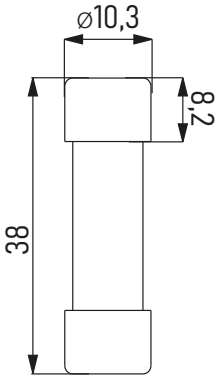

BREMAS

BETTER SWITCHES

# RCBOs

## Residual Current Breaker with Overcurrent

06

# RCBOs - Residual Current Circuit Breakers with Overcurrent Protection

Compact protection for AC circuits - SR Series

AC

RCBOs

- Combined protection against overcurrent, short circuits and earth leakage.
- Ideal for use in photovoltaic AC switchboards, auxiliary protection circuits, SPI power supply protection, loads requiring earth fault detection with overcurrent safeguard.
- Tripping characteristic C, suitable for mixed resistive and inductive loads.
- Breaking capacity of 6 kA.
- Leakage current type A, suitable for sinusoidal and pulsating DC residual currents.
- Rated residual current: 300 mA.
- Versions available: 16-25-32 A.
- Conformity to IEC/EN 61009.
- 2 modules width (1P+N) - Compact DIN rail design.
- Rated voltage: 230/240 V AC - 50/60 Hz.
- Degree of protection: IP20.

# SR Series

| Rated current | Rated residual current | N° of poles | Tripping characteristic | Leakage current type | Code |
|---|---|---|---|---|---|
| $I_n$ (A) | IΔn (mA) | | | | |
| 16 | 300 | 2 | C | A | SR06AC1NC16A300 |
| 25 | | | | | SR06AC1NC25A300 |
| 32 | | | | | SR06AC1NC32A300 |

We are available for additional custom configurations. Feel free to reach out to discuss your specific needs.

## Technical data

| | | | SR06AC1NC16A300 | SR06AC1NC25A300 | SR06AC1NC32A300 |
|---|---|---|---|---|---|
| **Standards** | | | | | |
| **Applicable Standards** | | | IEC 61009 | IEC 61009 | IEC 61009 |
| | | | EN 61009 | EN 61009 | EN 61009 |
| **Technical data** | | | | | |
| **Rated voltage** | $U_n$ | $V_{AC}$ | 230/240 | 230/240 | 230/240 |
| **Rated insulation voltage** | $U_i$ | V | 500 | 500 | 500 |
| **Rated current** | $I_n$ | A | 16 | 25 | 32 |
| **Rated frequency** | $F_n$ | Hz | 50 | 50 | 50 |
| **Rated impulse withstand voltage** | $U_{imp}$ | kV | 4 | 4 | 4 |
| **Rated short-circuit breaking capacity according to EN 61009** | | A | 6000 | 6000 | 6000 |
| **Rated residual current** | IΔn | mA | 300 | 300 | 300 |
| **Peak withstand current** | | A | 250 | 250 | 250 |
| **Back-up fuse** | gG type | A | 100 | 100 | 100 |
| **Tripping characteristic** | | | C | C | C |
| **Leakage current type** | | | A | A | A |
| **Current limiting class** | | | 3 | 3 | 3 |
| **Mechanical characteristics** | | | | | |
| **N° of poles (total)** | | | 2 | 2 | 2 |
| **N° of protected poles** | | | 1 | 1 | 1 |
| **Conductor cross section** | | $mm^2$ | 1-25 | 1-25 | 1-25 |
| **Terminal screw torque** | | Nm | 3 | 3 | 3 |
| **Terminal screw** | | | M5 | M5 | M5 |
| **Mounting position** | | | Any | Any | Any |
| **Resistance to vibrations acc. to IEC 60068-2-7** | | | 5g (10,60 & 500Hz) | 5g (10,60 & 500Hz) | 5g (10,60 & 500Hz) |
| **Degree of protection** | | | IP20 | IP20 | IP20 |
| **Dimensions (W-D-H)** | | mm | 35 x 75,5 x 88 | 35 x 75,5 x 88 | 35 x 75,5 x 88 |
| **Built-in depth** | | mm | 69 | 69 | 69 |
| **Width in number of modular spacings** | | | 2 | 2 | 2 |
| **Weight** | | g | 220 | 225 | 230 |

## Time current characteristics I/t

| Conductor cross-section | Number of single conductors, rigid, single-wire CU conductor | | | | |
|---|---|---|---|---|---|
| $mm^2$ | 1 | 2 | 3 | 4 | 5 |
| 1,5 | V | V | V | V | X |
| 2,5 | V | V | V | X | X |
| 4 | V | V | V | X | X |
| 6 | V | V | X | X | X |
| 10 | V | V | X | X | X |
| 16 | V | X | X | X | X |
| 25 | V | X | X | X | X |

Remark: When you use more than 2 cables you have to be careful how those cables are inserted, due to insure proper presure on each cable.

| Conductor cross-section | Number of single conductors, flexible Cu conductors without cable ferrule | | | | | |
|---|---|---|---|---|---|---|
| $mm^2$ | 1 | 2 | 3 | 4 | 5 | 6 |
| 1,5 | V | V | V | V | V | V |
| 2,5 | V | V | V | V | V | V |
| 4 | V | V | V | V | V | V |
| 6 | V | V | V | X | X | X |
| 10 | V | V | X | X | X | X |
| 16 | V | X | X | X | X | X |
| 25 | V | X | X | X | X | X |

Combination of rigid single-wire and flexible multi-wire Cu conductors is not allowed

## Electrical circuit

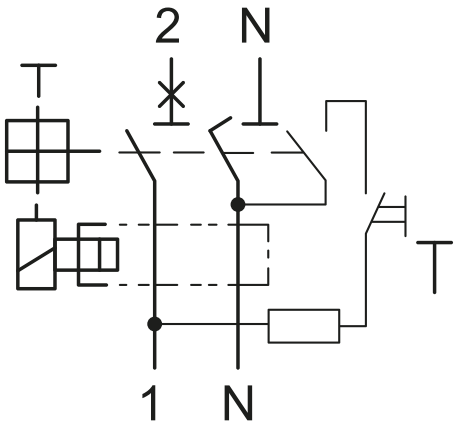


## Features

### Dimensions
SR Series

Dimension in mm

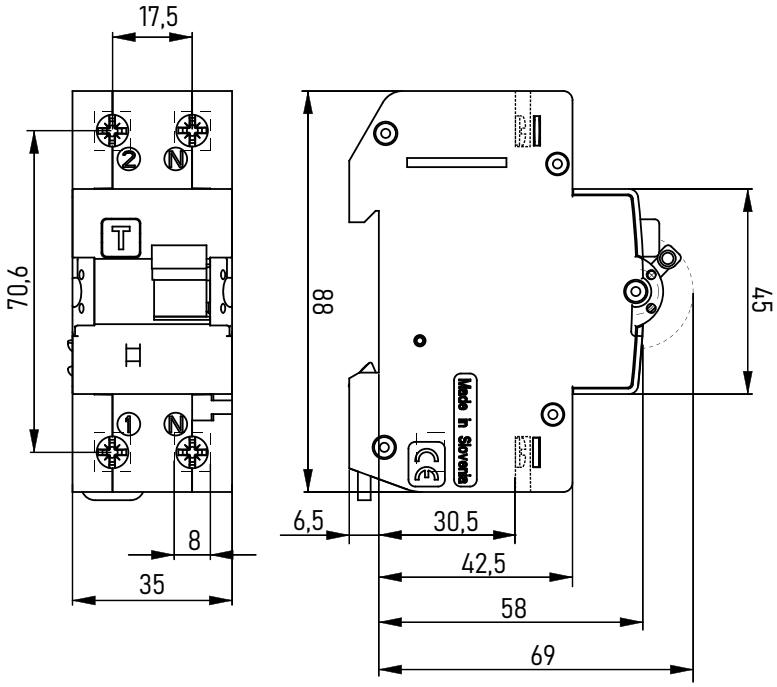

BREMAS

BETTER SWITCHES

SOL06.26EN

**Bremas Ersce S.p.A.**
Via Castellazzo, 9 - 20040 Cambiago (MI)
Telefono: +39.02.95651611 Fax: +39.02.95651639 Email: info@bremas.it
ISO 9001 Certified Quality System

bremas.it