SOLAR GUARDIAN

Enclosed solution – Plug and play

edition 09 : data 13/03/2025

Bremas Ersce S.p.A.
Via Castellazzo 9 – 20040 Cambiago (MI)
Tel +39 02 95651611 Fax +39 02 95651639
www.bremas.it info@bremas.it
ISO 9001 Certified Quality System

FB150304NUA2MC

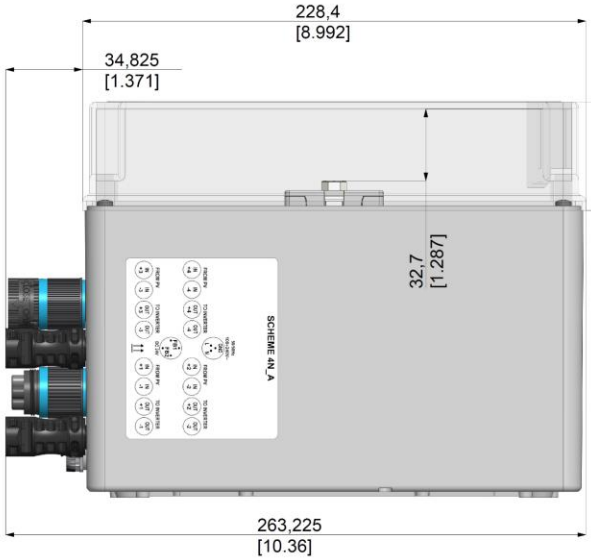

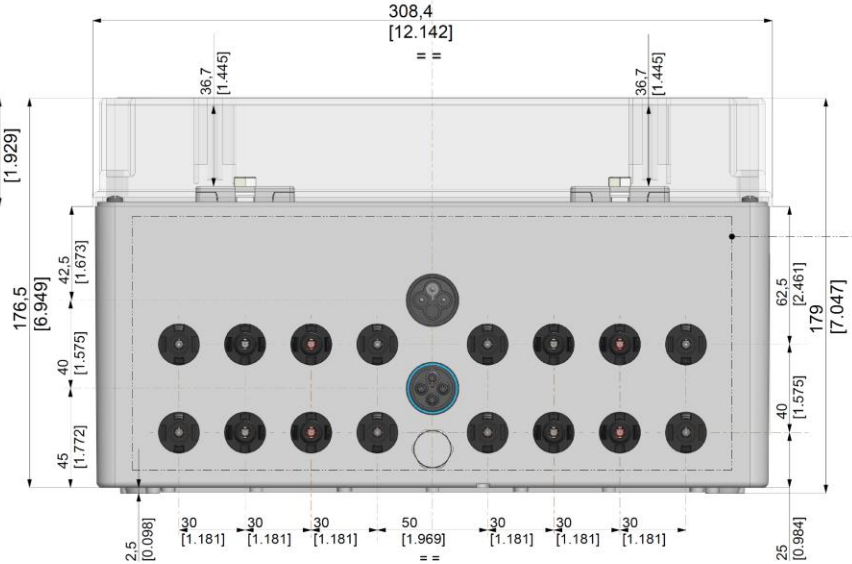

ELECTRICAL CONNECTION INDICATIONS LABEL

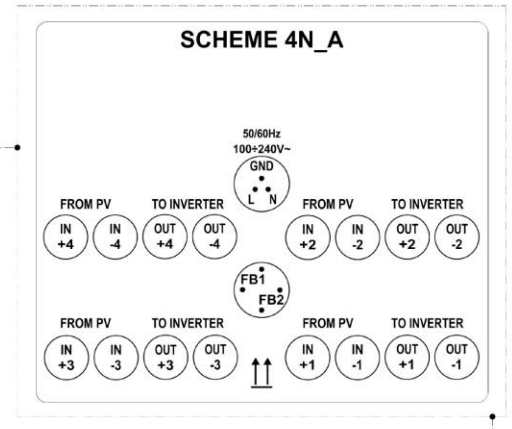

INTERNAL VIEW

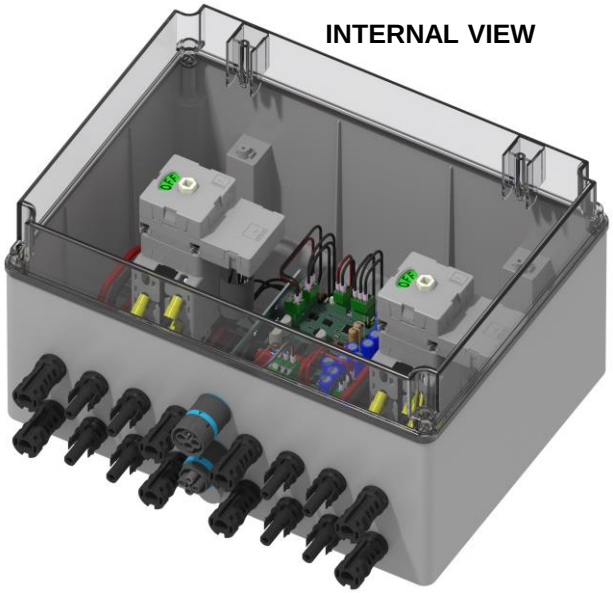

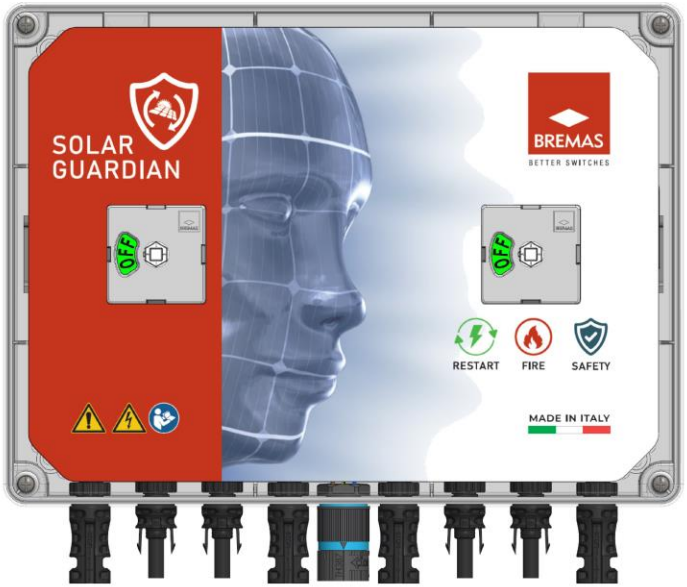

INTERNAL VIEW

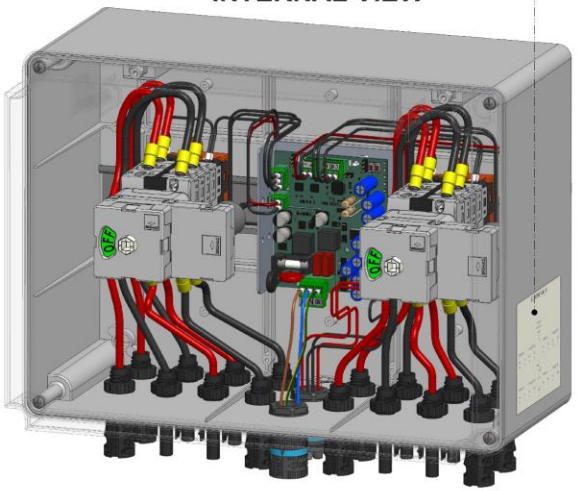

Dimension in mm
in [inch]

Dimensioni in mm
in [pollici]

@2017 Copyright Bremas Ersce. Subject to change without notice and errors excepted. Data reported in this paper are carefully checked and represent typical values of series production. The descriptions of the device and its applications, contexts of use, details of external controls, information on installation and operation are provided to the best of our knowledge. In any case, this does not mean from the features described it may derive legal responsibilities that extend beyond the "Terms and Conditions of sales" of Bremas Ersce. The customer / user must examine our information and recommendations and the relevant technical regulations before using the products its own purpose.

SOLAR GUARDIAN

Enclosed solution – Plug and play

edition 08 : data 13/03/2025

Bremas Ersce S.p.A.
Via Castellazzo 9 – 20040 Cambiago (MI)
Tel +39 02 95651611 Fax +39 02 95651639
www.bremas.it info@bremas.it
ISO 9001 Certified Quality System

FB150304NUA2MC

CE

WALL MOUNTING BRACKETS

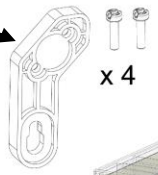

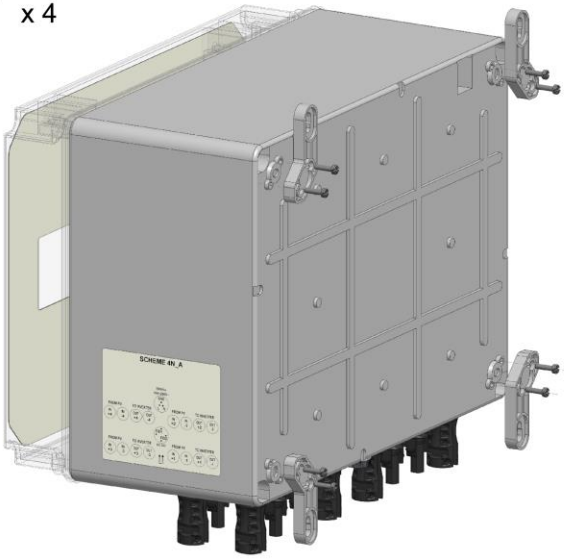

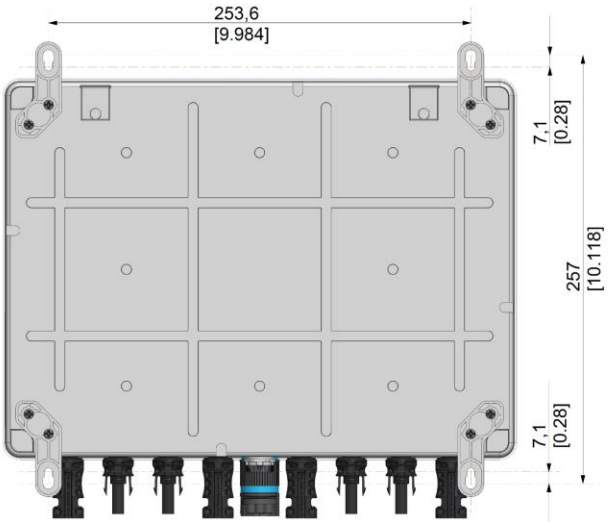

WALL FIXING HOLES FOR VERTICAL BRACKETS

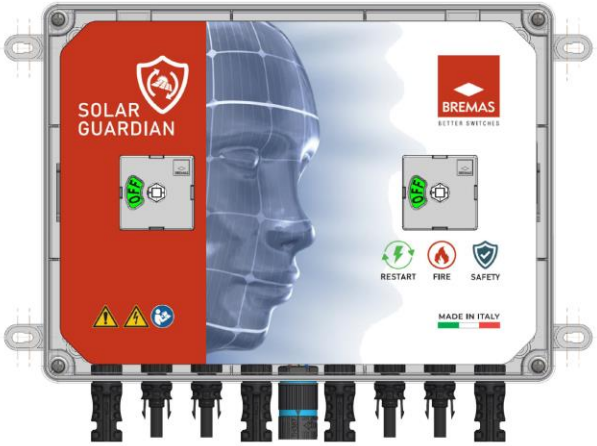

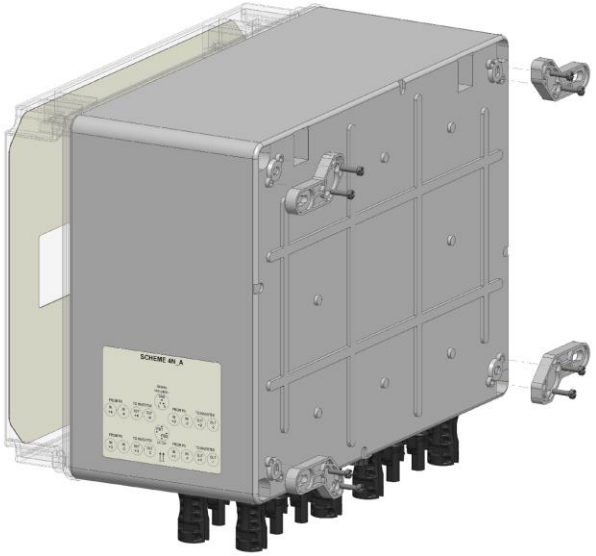

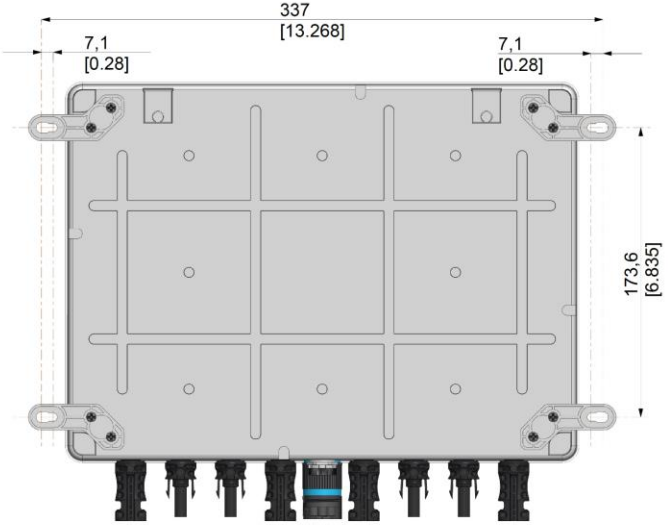

WALL FIXING HOLES FOR HORIZONTAL BRACKETS

Dimension in mm
in [inch]

Dimensioni in mm
in [pollici]

@2017 Copyright Bremas Ersce. Subject to change without notice and errors excepted. Data reported in this paper are carefully checked and represent typical values of series production. The descriptions of the device and its applications, contexts of use, details of external controls, information on installation and operation are provided to the best of our knowledge. In any case, this does not mean from the features described it may derive legal responsibilities that extend beyond the "Terms and Conditions of sales" of Bremas Ersce. The customer / user must examine our information and recommendations and the relevant technical regulations before using the products its own purpose.

SOLAR GUARDIAN

Enclosed solution – Plug and play

edition 08 : data 13/03/2025

Bremas Ersce S.p.A.
Via Castellazzo 9 – 20040 Cambiago (MI)
Tel +39 02 95651611 Fax +39 02 95651639
www.bremas.it info@bremas.it
ISO 9001 Certified Quality System

FB150304NUA2MC

POWER CONNECTORS(DC)

Technical data according to IEC 60947-3				
Rated insulation voltage	Ui	V	1500	
Rated impulse withstand voltage	Uimp	kV	8	
Rated thermal current	Ith	A	50	
DC inputs				
Number of inputs			1	
Utilization category			PV1	PV2
Rated operational current at 1500 V	Ie	A	20	8
Rated operational current at 1300 V	Ie	A	25	10
Rated operational current at 1250 V	Ie	A	30	12
Rated operational current at 1000 V	Ie	A	50	20
Rated operational current at 800 V	Ie	A	-	30
Rated operational current at 700 V	Ie	A	-	40
Short circuit protection				
Rated conditional short-circuit current		kA	5	
Max fuse size for short circuit protection	gPV	A	50	
Rated short-time withstand current (1 s)	Icw	A	780	
Rated short-circuit making capacity	Icm	kA	1,4	
Terminals on the products				
Panel MC4 plug-in connectors STAUBLI EVO2		Female	32.0346P0001	
Panel MC4 plug-in connectors STAUBLI EVO2		Male	32.0347P0001	
Terminals reccomended for the installation				
Coupler MC4 plug-in connectors STAUBLI EVO2		Female	32.0318P0001	
Coupler MC4 plug-in connectors STAUBLI EVO2		Male	32.0319P0001	
Protection degree IEC EN 61439-2				
Solution in box			IP56	
Ambient conditions				
Pollution degree			2	
Operational ambient temperature		°C	-30 ÷ +50	
Storage ambient temperature		°C	-30 ÷ +85	
Damp heat test IEC 60068-2-30			90-100% RH at +55 °C	
Protection Temperature				
Temperature for automatic shutdown		°C	+100	

AUXILIARY CONNECTORS

L-N-GND Connector			
Rated operational voltage	Ui	VAC	500
Working frequency		Hz	50÷60
Rated impulse withstand voltage	Uimp	kV	4
Rated operational current	Ie	A	17,5
Nominal operating voltage	**Un**	**VAC**	**100÷240**
Nominal power dissipation	**Max**	**W**	**10**
Nominal current	**In**	**mA**	**40 (at 230V)**
Degree of protection			IP68
Connection type			M3 screws
Tightening torque	Max	Nm	0,8
Cross-section of flexible/solid wires	Min-Max	mmq	0,5 ... 4
Cable diameter	Min-Max	mm	7... 12
Operational ambient temperature		°C	-40 ÷ +125
FB1-FB2 Connector			
Rated operational voltage	Ui	VAC/DC	500
Working frequency		Hz	50÷60
Rated impulse withstand voltage	Uimp	kV	4
Rated operational current	Ie	A	17,5
Nominal operating voltage of contact	**Max**	**VAC/DC**	**60**
Nominal external power of contact	**Max**	**W**	**60**
Nominal current of contact	**Max**	**A**	**1**
Degree of protection			IP68
Connection type			M3 screws
Tightening torque	Max	Nm	0,8
Cross-section of flexible/solid wires	Min-Max	mmq	0,5 ... 4
Cable diameter	Min-Max	mm	7... 12
Operational ambient temperature		°C	-40 ÷ +125

FB1-FB2 EXAMPLE OF CONNETION:

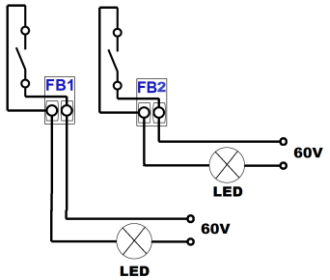

@2017 Copyright Bremas Ersce. Subject to change without notice and errors excepted. Data reported in this paper are carefully checked and represent typical values of series production. The descriptions of the device and its applications, contexts of use, details of external controls, information on installation and operation are provided to the best of our knowledge. In any case, this does not mean from the features described it may derive legal responsibilities that extend beyond the "Terms and Conditions of sales" of Bremas Ersce. The customer / user must examine our information and recommendations and the relevant technical regulations before using the products its own purpose.

SOLAR GUARDIAN

Enclosed solution – Plug and play

edition 09 : data 13/03/2025

FB150304NUA2MC

Bremas Ersce S.p.A.
Via Castellazzo 9 – 20040 Cambiago (MI)
Tel +39 02 95651611 Fax +39 02 95651639
www.bremas.it info@bremas.it
ISO 9001 Certified Quality System

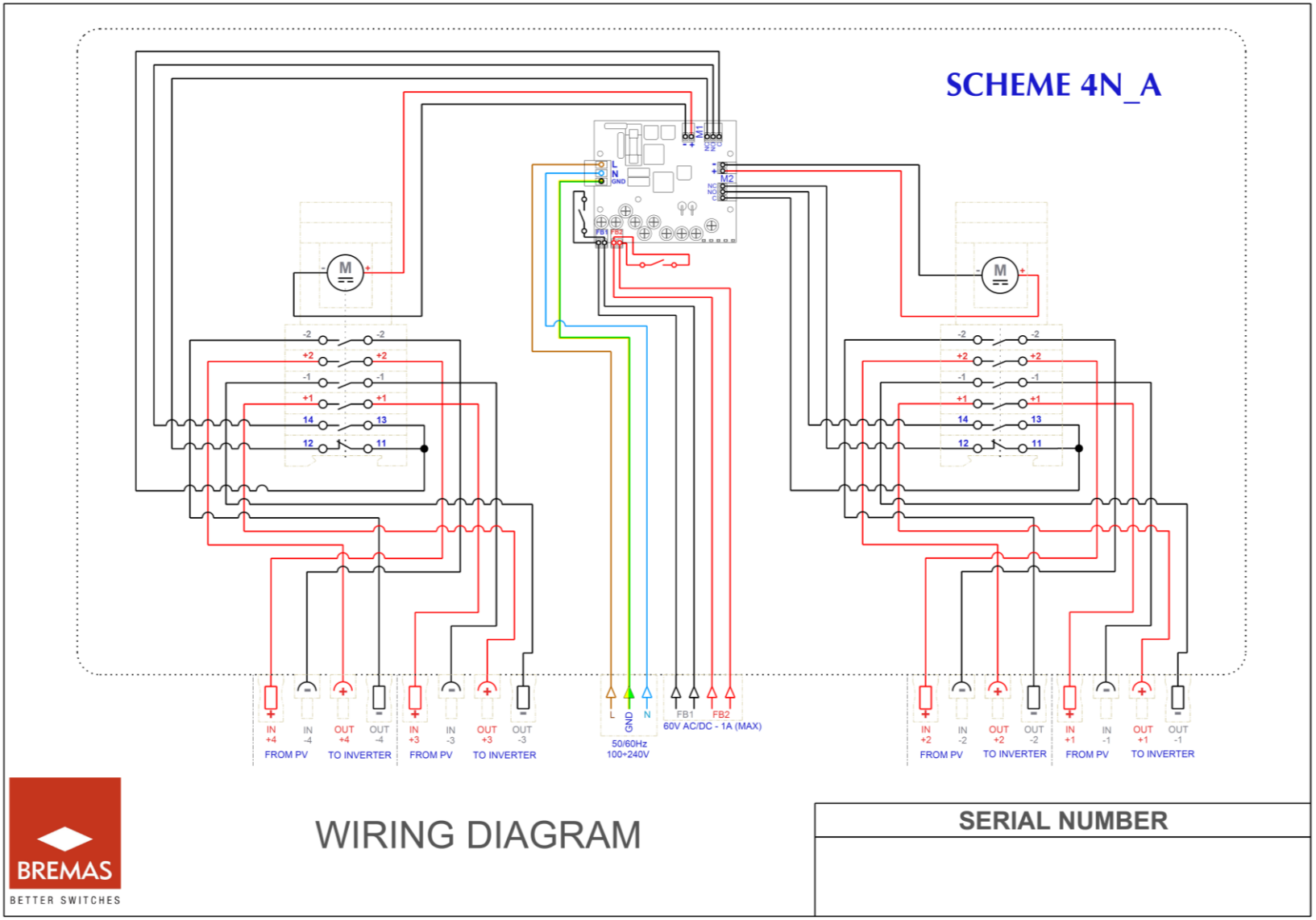

@2017 Copyright Bremas Ersce. Subject to change without notice and errors excepted. Data reported in this paper are carefully checked and represent typical values of series production. The descriptions of the device and its applications, contexts of use, details of external controls, information on installation and operation are provided to the best of our knowledge. In any case, this does not mean from the features described it may derive legal responsibilities that extend beyond the "Terms and Conditions of sales" of Bremas Ersce. The customer / user must examine our information and recommendations and the relevant technical regulations before using the products its own purpose.

Bremas Ersce S.p.A.
Via Castellazzo 9 – 20040 Cambiago (MI)
Tel +39 02 95651611 Fax +39 02 95651639
www.bremas.it info@bremas.it
ISO 9001 Certified Quality System

MINI-PLUG-SOCKET CONNECTOR IP66/IP68

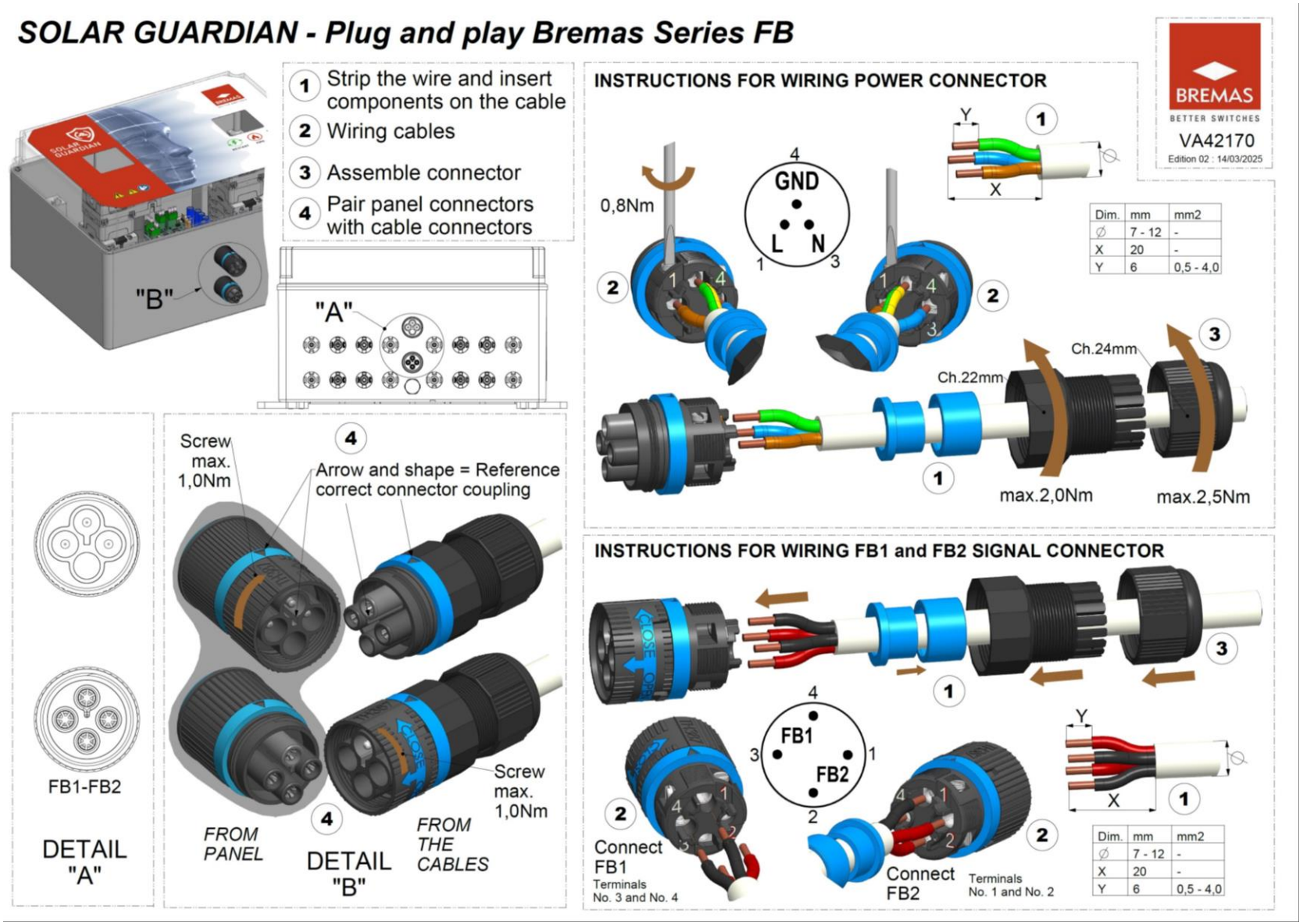

@2017 Copyright Bremas Ersce. Subject to change without notice and errors excepted. Data reported in this paper are carefully checked and represent typical values of series production. The descriptions of the device and its applications, contexts of use, details of external controls, information on installation and operation are provided to the best of our knowledge. In any case, this does not mean from the features described it may derive legal responsibilities that extend beyond the "Terms and Conditions of sales" of Bremas Ersce. The customer / user must examine our information and recommendations and the relevant technical regulations before using the products its own purpose.